Magazine of Concrete Research, 1998, **50**, No. 3, Sept., 237–246

Scale dependence of tensile strength of concrete specimens: a multifractal approach

A. Carpinteri*, B. Chiaia* and G. Ferro*

Politecnico di Torino

The tensile strength is a parameter that is usually very difficult to determine. Nevertheless, knowledge of its effective value is of strategic importance, as materials are often used at the limit of their performance. In all tensile experiments done in the last few decades (direct tensile test, splitting test, pull-out test, double punch test) it is evident that the tensile strength varies with the dimension of the specimen. Increasing the specimen size results in a decrease in the nominal tensile strength. We propose a new size-effect law, the multifractal scaling law, which describes satisfactorily the relationship between the strength parameter and the structural size for disordered materials. The law considers the geometrical multifractality of the resisting section at the peak load, as a consequence of the decreasing influence of the disorder with increasing size. Extensive application of this law to various experimental results reported in the literature, and concerning direct and indirect tensile tests, is presented. A simpler version of this law is introduced and a comparison between the linear and nonlinear best-fits is discussed.

Notation

a	notch depth
A, B	MFSL fitting parameters
b	secondary structural size
C, D	SEL fitting parameters
d	characteristic structural size
d_{max}	maximum aggregate size
f_t	tensile strength for infinitely large structures
f'_c	compressive strength
l_{ch}	characteristic length
P_u	maximum tensile load
R	correlation coefficient
X^*	abscissa of linearized MFSL
Y^*	ordinate of linearized MFSL
$\overline{X}$	abscissa of linearized SEL
$\overline{Y}$	ordinate of linearized SEL
σ_N	nominal tensile strength

* Department of Structural Engineering, Politecnico di Torino, Corso Duca degli Abruzzi 24, 10129 Torino, Italy.

(MCR 614) Paper received 4 November 1996; last revised 29 July 1997; accepted 23 September 1997

Introduction

The problem of determining the tensile failure properties of materials is an old one. Nevertheless, only in the last few decades have researchers tackled it in a more systematic way, focusing on the peculiar aspects of the phenomenon. The classical approach of limit analysis and in general of all the theories based on classical mechanics, that in the past permitted us to build very reliable and durable structures, is now inadequate to meet the requirements of very small (electronic structures) and very large structures (e.g. dams and atomic power plants), where safety is a fundamental aspect of design. In the same way, the new very high performance composite materials, initially developed for use in the aerospace industry, are now used in general engineering practice (laminate and fibre-reinforced composites in the manufacture industry, high-resistance concrete in the building industry, and metal matrix composites such as aluminium–lithium, etc.).

In all these cases, the inadequacy of classical mechanics is evident: material failure is not completely described, and consequently only the mean strength values are used. Such mean values constitute only partial information about the complex phenomena. In particular, the classical approach does not describe the strength scale

effects, while it is clear from experimental observations that strength decreases with increasing structural size.

Fracture mechanics can be considered to originate from the observation of material-strength scale effects. The unexpected failure of the Liberty ships (1940–1945) under tensile stresses lower than the standard safety value determined in the laboratory, and in a very brittle way compared with the experimental responses observed in specimens of the same material, represents one of the first indicators of the importance of structure size on the global structural response (ductility and strength). Analogously, the very high ductility and strength of microscopic glass filaments (whiskers) observed by Griffith[1] cannot be explained if the structure size is not considered as an essential variable of the problem.

In this paper attention is focused on the variation in the material tensile strength, which experimentally always increases with decreasing structure size, regardless of the kind of test carried out. This variation is interpreted satisfactorily by the multifractal scaling law (MFSL),[2] which can be considered as an extension of the monofractal scaling theory, proposed by Carpinteri.[3,4] In the assumed hypotheses, the resisting section of a specimen at the peak load is modelled as a lacunar fractal set, with a Hausdorff dimension less than 2. On increasing the specimen size, the progressive homogenization of the random fields comes into play. Thus, for the largest sizes, fractality disappears (geometrical multifractality) at the structural level, and the classical Euclidean approach can be adopted. The main problem lies in the evaluation of the asymptotic value for the strength, which is lower than the value obtained from laboratory specimens. The MFSL is based on the assumption that the resisting section shows geometrical multifractality, and allows the strength of large structures to be determined by extrapolating a sufficient range of experimental data obtained in the laboratory.

In the present work, the MFSL is applied to a wide series of relevant experimental results reported in the literature. The results were obtained using direct tensile tests, splitting (or Brazilian) tests, double-punch tests and pull-out tests. The experimental values confirm the validity of the MFSL, which can be very useful in design, by extrapolating the strength variation over an unbounded scale range.

In addition, a linear version of the law is introduced. With this version it is possible to determine in a simple way the values of the two free parameters using a simple linear regression, and it could represent a useful tool for the building codes. A comparison between the non-linear version and the linear approach is also given.

Experimental tests for the tensile strength

In this section the relevant literature on the British and American standard tests for evaluating experimentally the tensile properties of concrete is reviewed. It is very difficult to determine the mechanical parameter 'tensile strength' for concrete-like materials. It is easier to test steel-wire ropes and cables because it is simple to grasp the ends and roll them up on the cylinder of a winch or windlass. It is more difficult to grasp less deformable solids in order to perform a tensile test. For this reason, for a long time such tests have been limited to compression and bending.

Normally, indirect tensile tests are used to evaluate the tensile strength. We use the term 'indirect tensile test' to indicate a test in which the tensile strength is determined by loading the specimen with a stress field different from the uniform tensile one. The most commonly used indirect tensile tests for evaluating the tensile strength of concrete are the splitting test (BS 1881: Part 117[5] and ASTM C 496[6]) (Fig. 1(a)) and the three-point (ASTM C 78[7]) flexural loading and four-point flexural loading tests (BS 1881: Part 118[8]) (Fig. 1(b)). Other indirect tensile tests are: the wedge-splitting test (Fig. 1(d)) (which is the equivalent of the compact test used for metals), the double-punch test[9] (Fig. 1(c)) and the pull-out test (Fig. 1(e)). These tests are easy to perform, although the results obtained are not always very significant, particularly with regard to the complete experimental load versus relative deformation curve. This curve is fundamental in the description and definition of the material behaviour under tensile load. For this reason, in the last thirty years numerous researchers have proposed different experimental procedures.

The first set-up for performing direct mechanical tests was designed with jaw-like clamps (called friction jaws), and was designed for doing tensile tests on iron bars. In practice, this solution was unsatisfactory, because the jaws damage the extremities of the specimen, and thus the results obtained are unreliable. For this reason, dog-bone specimens were used, the rationale being that the failure was localized in the middle zone where the specimen is thinner. However, the design and construction of satisfactory specimens requires an advanced level of knowledge and experience, because the optimum shape depends on the material to be tested. Some researchers tried to design specimens in which the compressive load was converted into a tensile one, by means of two co-axial perforations[10] (Fig. 2(d)).

The problem is even more complex when we want to determine the complete stress–deformation curve. First of all, it is necessary that the test is controlled in a stable way, in order to obtain the post-linear part of the diagram. For quasi-brittle materials, such as concrete, the post-linear part of the curve is characterized by a softening response, with a negative slope, due to the localization of failure. It is then necessary that the failure occurs in a prefixed zone, where the extensometers are placed. Moreover, and this is the most delicate requirement, it is necessary that the resultant of the load is maintained perfectly centred, in order to avoid bending moments, which can complicate the interpreta-

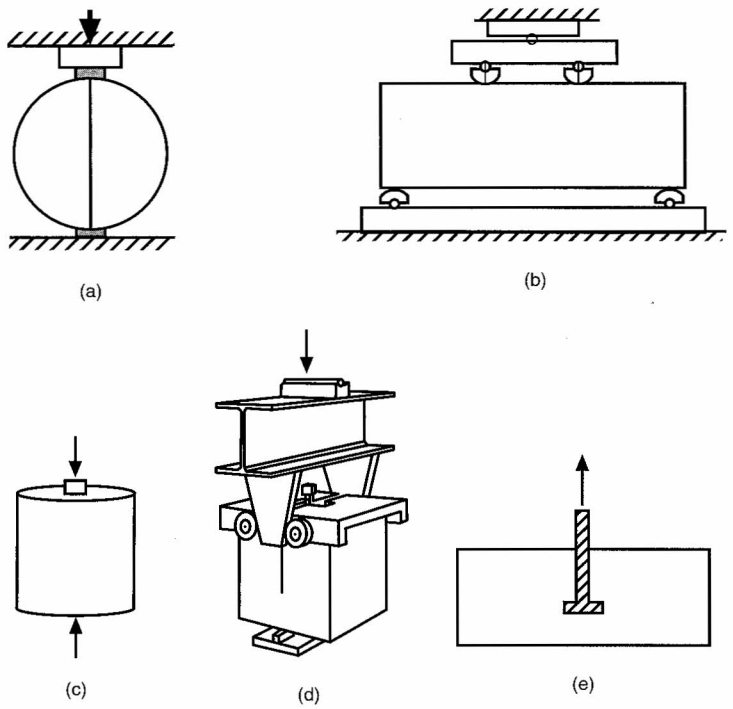

Fig. 1. Indirect tensile tests; (a) Brazilian splitting test; (b) four-point flexural test; (c) double-punch test;[9] *(d) wedge-splitting test; (e) pull-out test*

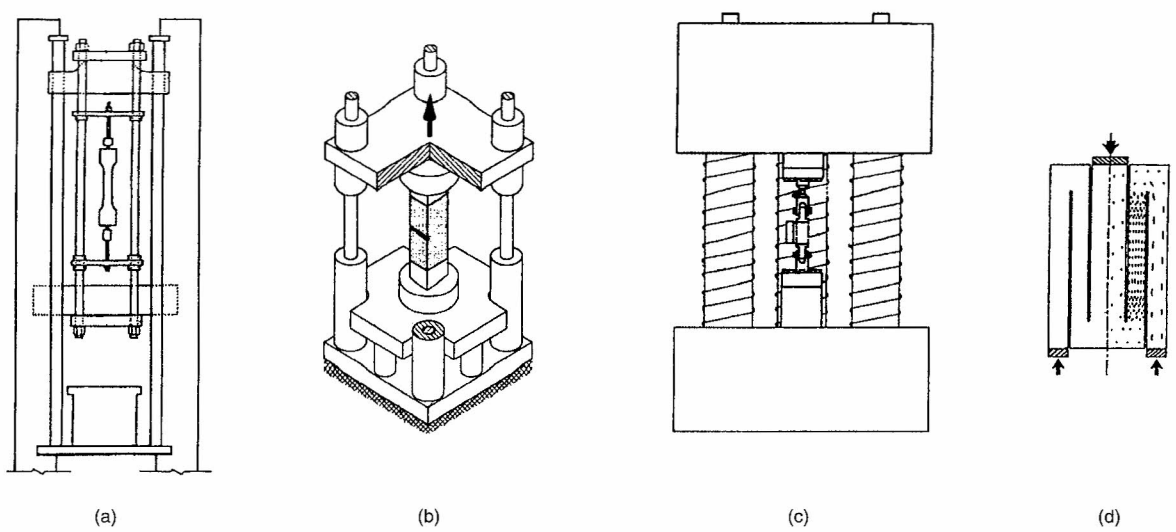

Fig. 2. Direct tensile schemes: (a) Evans and Marathe;[11] *(b) Reinhardt et al.;*[12] *(c) Petersson;*[13] *(d) Luong*[10]

tion. Even if we centre the resultant at the beginning of the test, the growth of the cracks in the loading process leads to a cross-sectional asymmetry and hence produces flexural stresses.

It thus appears logical to use servo-controlled machines to keep the flexural forces under control along two mutually orthogonal planes. For this purpose, a completely new testing apparatus made up of three mutually orthogonal actuators was proposed by Carpinteri and Ferro[14] (Fig. 3). Two different series of tests were performed on concrete specimens in the scale range 1:16. Only when the experimental results are obtained over a scale range of at least one order of magnitude is it possible to evaluate the relationship between tensile strength and structure dimension.

In other experimental studies reported in the literature[11–13,15,16] the complete stress–strain curve was obtained from direct traction (see Fig. 2). Nevertheless, the machines were not suitable for testing specimens of different sizes. Only Bažant and Pfeiffer[17] and Nooru-

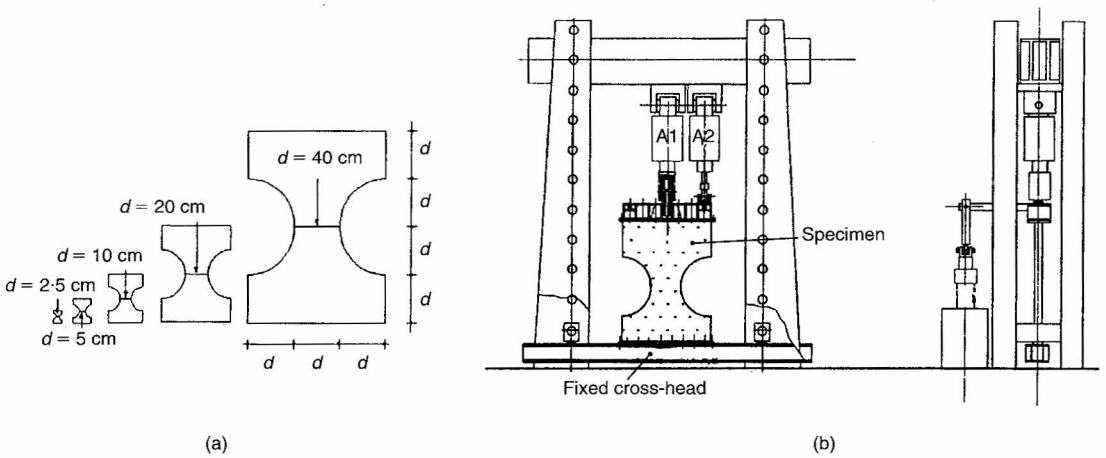

Fig. 3. Testing scheme with a three-jacks solution: (a) scaling of specimens tested; (b) experimental set-up proposed by Carpinteri and Ferro[14]

Mohamed and van Mier[18] obtained results in a scale range of 1:4. The tests performed by Nooru-Mohamed and van Mier, on the other hand, were conducted by controlling the load eccentricity in the specimen plane only, using two actuators, whereas in the tests done by Bažant and Pfeiffer no eccentricity control was performed.

Linearization of the MFSL

The MFSL proposed by the authors[2] is based on the hypothesis of geometrical multifractality of the resisting section of disordered materials at the peak load. In fact, the ligament can be considered as a lacunar fractal set, with a fractal dimension $\Delta = 2 - d_\sigma$, where d_σ is the dimensional decrement due to non-homogeneous damage in the material (Fig. 4). The fractal dimension plays a fundamental role at small structural sizes, whereas at larger scales the heterogeneities of the material become less dominant, being limited by the maximum size of the aggregates. At the largest scales, the resistant cross-section could be considered as a Euclidean set with the classical physical dimension $\Delta = 2$. More details on the MFSL are reported in Carpinteri *et al.*[19] Moreover, the effects of microstructural disorder become progressively less important at larger scales, whereas they represent a fundamental effect at smaller scales.

The statistical analysis performed using the MFSL aims, first, at the validation of the multifractal model by means of the goodness of fit of the experimental data and, secondly, to the extrapolation of reliable values to very large structures. The analytical expression of the MFSL is

$$\sigma_N = f_t\left(1 + \frac{l_{ch}}{d}\right)^{1/2} \qquad (1)$$

where the non-dimensional term in the brackets represents the positive deviation, due to disorder, from a limit nominal strength f_t, valid for infinitely large sizes. The parameter l_{ch} represents a characteristic length related to the internal material length, and depends on the microstructure. Unfortunately, l_{ch} is dependent on the test geometry, and is slightly influenced also by the presence of a notch. The parameters l_{ch} and f_t represent the two constants to be determined from the best-fit of the experimental data. The non-linear best-fit algorithm proposed by Levenberg[20] and Marquardt[21] was used, this representing the optimal procedure for the application of the MFSL. Unfortunately, this method is not well suited for engineering purposes, due to the relatively complex algorithms that are involved in the computation. An alternative, easier way of determining the MFSL parameters from experimental data is represented by the linearization of the function (1) by means of changing the coordinates.

It is possible to rewrite the MFSL in the following form:[2]

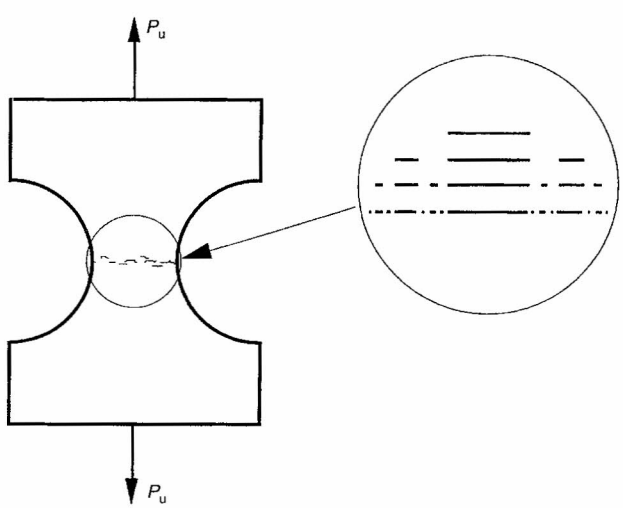

Fig. 4. Self-similar array of cracks, complementary to the lacunar resisting section at the peak load. P_u, maximum tensile load

$$\sigma_N = \left(A + \frac{B}{d}\right)^{1/2} \quad (2)$$

where $A = f_t^2$ and $B = f_t^2 l_{ch}$. Taking the square of the two members of equation (2), we obtain

$$\sigma_N^2 = A + \frac{B}{d} \quad (3)$$

Instead of fitting the data in the σ_N, d plane, one may consider transforming the data to the $Y^* = \sigma_N^2$ versus $X^* = 1/d$ plane, where the datapoints tend to be disposed along a narrow strip. The MFSL is described by a linear function in the X^*, Y^* plane:

$$Y^* = A + BX^* \quad (4)$$

where A and B are the same parameters considered in the non-linear expression (equation (2)). The best-fit parameters can therefore be determined by a simple linear regression of the experimental data in the X^*, Y^* plane. Note that Bažant's size effect law (SEL)[22] can also be linearized,[17] although in a different $\overline{X}$, $\overline{Y}$ plane. The expression of the SEL can be conveniently written as

$$\sigma_N = \frac{A}{(B + d)^{1/2}} \quad (5)$$

Taking the square of equation (5), and considering its reciprocal, one obtains

$$\frac{1}{\sigma_N^2} = \frac{1}{A^2}(B + d) \quad (6)$$

Assuming $\overline{Y} = 1/\sigma_N^2$ and $\overline{X} = d$, the following linear expression is obtained for the SEL:

$$\overline{Y} = C + D\overline{X} \quad (7)$$

where $C = B/A^2$ and $D = 1/A^2$. Once C and D have been determined by linear regression in the $\overline{X}$, $\overline{Y}$ plane, the SEL parameters A and B are given by: $A = 1/\sqrt{D}$ and $B = C/D$.

In the following section comparison is made between the MFSL and SEL linearized fitting of experimental data. Even a rough comparison shows that the MFSL parameters are rather insensitive to linearization, while the SEL parameters determined by linear regression differ substantially from the corresponding non-linear ones.[23]

Application of the MFSL to tensile experimental data

The MFSL was applied to nearly 60 sets of relevant experimental data reported in the literature.[23] The experiments concerned both direct and indirect tensile tests. In the present section, the most significant experimental data are presented. The data analysed in this work relate to the largest scale ranges. In any case, fitting of the experimental data appears to be consistent only if (at least) one order of magnitude is considered in the scale range. In addition, we present a comparison of the non-linear version of the MFSL and the linear version described in the previous section.

Indirect tensile tests

The first geometry investigated is represented by the Brazilian test (splitting cylinder tests) carried out by Hasegawa *et al.*[24] Concrete cylinders, geometrically similar in two dimensions, were tested over a wide scale range (1:30), the smallest dimension being 100 mm and the largest 3000 mm. All the specimens were 500 mm thick and the maximum aggregate size of concrete d_{max} was 25 mm. The average compressive strength of the 100 mm diameter and 200 mm high cylinders was 23·4 MPa. Note that the nominal tensile strength was defined according to the maximum normal stress given by the theory of elasticity:

$$\sigma_N = \frac{2P_u}{\pi b d} \quad (8)$$

where P_u is the failure load, and b and d are the specimen thickness and diameter, respectively. The values of the MFSL constants, obtained by using the non-linear fitting method, are reported in Table 1. The asymptotic strength f_t is equal to 80% of the mean strength (1.80 MPa), but to only 56% of the strength obtained from the smallest specimens. This result is very significant in appreciating the importance of the scale effect on the real structures. The MFSL and its linearization in the modified plane are shown in Fig. 5, and the MFSL and the SEL in the double logarithmic strength versus dimension plane are shown in Fig. 6. It is possible to evaluate the large difference between the two laws. The same diagram shows the values obtained with the linear versions of the two laws. The linearization of the MFSL seems to be closer to its non-linear version than is the linear version of the SEL to its non-linear form. The percentage difference between linear and non-linear versions of the MFSL and the SEL, respectively, are reported in Table 1. The good approximation of the MFSL obtained with linear fitting is a very interesting result, and implies that the method is suitable for implementation in building codes.

The same conclusion was obtained using the results of the split-cylinder tests performed at the Northwestern University (Fig. 7).[25] The tests were conducted on the scale of 1:27 on cylinders of diameters $d = 19$, 38, 76, 152, 254 and 508 mm. The thickness of all the specimens (i.e. the cylinder length) was $b = 51$ mm. The maximum aggregate size was $d_{max} = 5$ mm. The compressive strength f'_c was 51·4 MPa.

The nominal stress values from measured maximum load are plotted as a $\log \sigma_N$ versus $\log d$ diagram in Fig. 8. The non-linear MFSL fitting provides the values reported in Table 1; $f_t = 4{\cdot}80$ MPa represents nearly one-tenth of the compressive strength f'_c, and 82% of the mean strength. In this case, as in the previous one,

Table 1. Results obtained by the statistical analysis performed with MFSL and SEL

Type of test	Reference	Scale range	R (MFSL)	R (SEL)	f_t: MPa	l_{ch}: mm	$\alpha = l_{ch}/d_{max}$	Linear approximation vs MFSL: %	Linear approximation vs SEL: %
Splitting	Hasegawa *et al.*[24]	1:30	0.966	0.663	1.45	199.2	7.96	5.87	13.31
Splitting	Bažant *et al.*[25]	1:27	0.872	0.570	4.80	24.5	4.90	1.40	12.10
Pull-out	Eligehausen *et al.*[26]	1:9	0.996	0.977	0.52	438.6	19.90	9.99	47.2
Double-punch	Marti[9]	1:16	0.903	0.996	1.24	112.7	11.24	4.74	1.15
Direct tensile	Bažant and Pfeiffer[17]	1:4	0.952	0.999	2.82	29.2	2.30	0.69	0.46
Direct tensile	Nooru-Mohamed and van Mier[18]	1:4	0.917	0.988	0.96	44.8	22.40	1.39	1.62
Direct tensile	Carpinteri and Ferro[27,28]	1:16	0.842	0.620	3.67	20.32	1.27	1.14	5.81

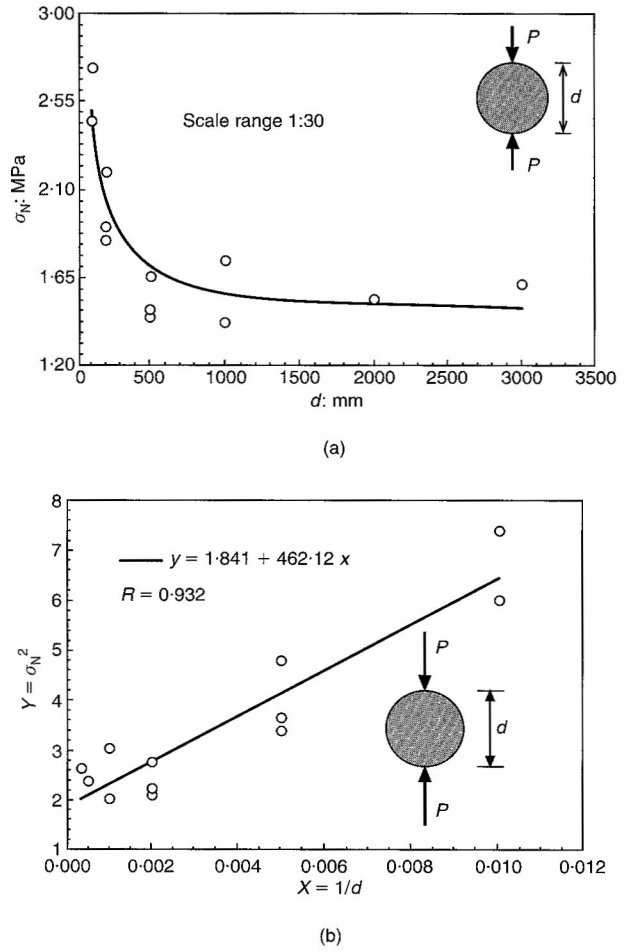

Fig. 5. The MFSL for the splitting test results reported by Hasegawa et al.:[24] (a) non-linear MFSL; (b) linearization of the MFSL in the modified plane

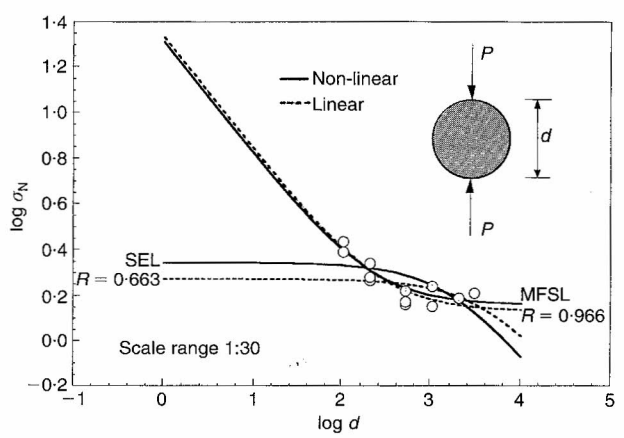

Fig. 6. Application of the MFSL and SEL, as linear and non-linear regressions, to the splitting test results reported by Hasegawa et al.[24]

the MFSL describes the phenomenon of the scale effect in a better way than does the SEL. Noting the weak adherence of the SEL to the Brazilian splitting test results, Bažant *et al.*[25] proposed the introduction of an

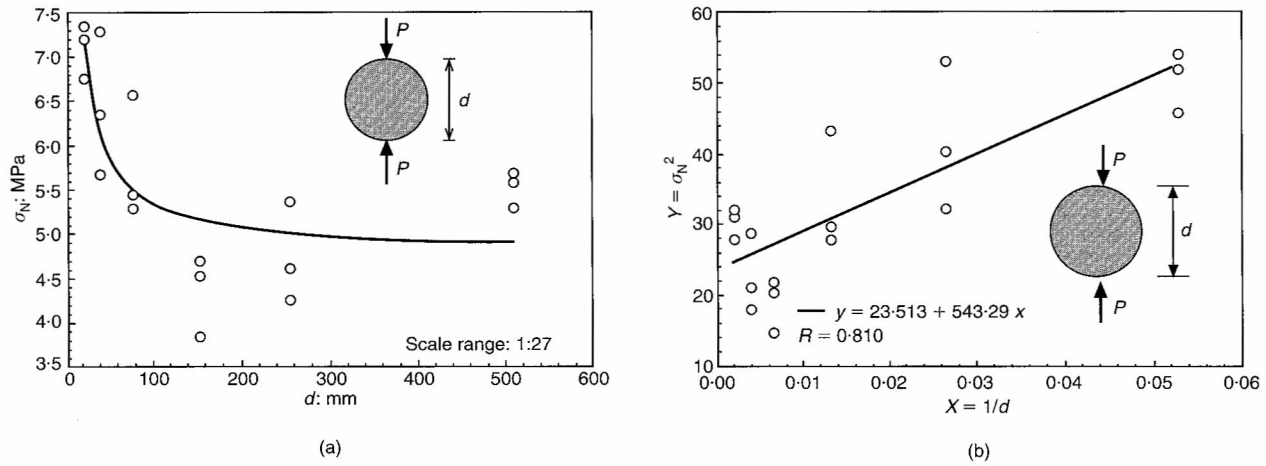

Fig. 7. The MFSL for the splitting test results reported by Bažant et al.:[25] (a) non-linear MFSL; (b) linearization of the MFSL in the modified plane

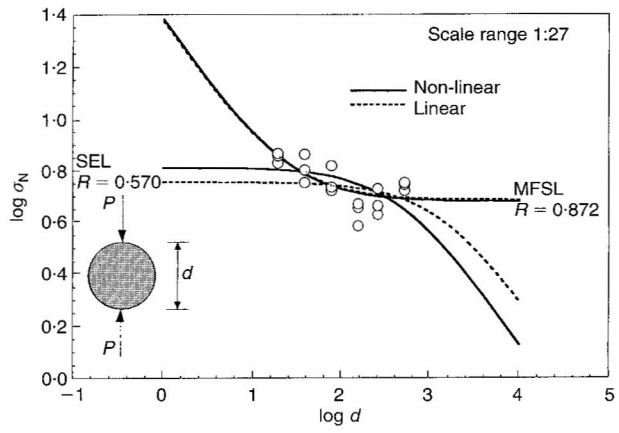

Fig. 8. Application of the MFSL and SEL, as linear and non-linear regressions, to the splitting test results reported by Bažant et al.[25]

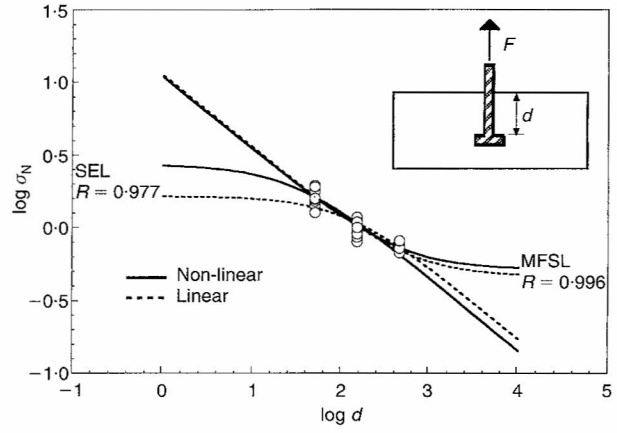

Fig. 9. Application of the MFSL and SEL, as linear and non-linear regressions, to the pull-out test results reported by Eligehausen et al.[26]

asymptote for $d \to \infty$. They affirmed that the damage extension at failure is constant for specimens larger than d_{lim}, and then is not proportional to the specimen diameter. The linearized MFSL gives an excellent approximation of the non-linear version (Fig. 8).

The linearization of MFSL seems to approximate the mechanical behaviour in a better way than the corresponding linear version of the SEL for the pull-out test performed by Eligehausen *et al.*[26] (Fig. 9). Specimens and headed anchor bolts of three different sizes but the same geometrical shape were used. To obtain the corresponding dimensions the scaling ratio 1:3:9 was applied, the actual embedment lengths being 50, 150 and 450 mm. All the specimens were made of concrete of nominally identical quality with a specified cube strength f'_c of 30 MPa, while the tensile strength f'_t, measured using the splitting test, was 3·0 MPa. The mean value of the fracture energy was measured as 155 N/m. The water/cement ratio was 0·58 and the maximum aggregate size $d_{\max}$ was 22 mm. In all the tests failure was caused by pulling out of a concrete cone, the shape of which was approximately similar for all embedment depths. Due to this kind of failure, the nominal collapse stress used in the statistical analysis was calculated as

$$\sigma_N = \frac{P_u}{A_{\text{cone}}} \tag{9}$$

where P_u is the ultimate load, normalized with respect to the cube compressive strength, and $A_{\text{cone}} = \pi(3d)^2/4$ is the nominal surface area of the failure cone, d being the embedment depth. The results of the statistical analysis are reported in Table 1.

The double-punch tests performed by Marti[9] show a better adherence of the results to the SEL. Specimen representative size d (which is the diameter of the bases

of the cylinders) ranges from 76 to 1219 mm (scale range 1:16). The maximum aggregate size d_{max} was 10 mm. The average compressive strength determined from cylinder tests was 23·6 MPa. The nominal strength used in the statistical analysis was given by:

$$\sigma_N = 0{\cdot}4\frac{P_u}{d^2} \tag{10}$$

where P_u is the failure load and d is the specimen diameter. The nominal stress values at the measured maximum load are plotted in Fig. 10 as a $\log \sigma_N$ versus $\log d$ diagram.

Direct tensile tests

Only three investigations using the direct tensile test have been reported in the literature. In the study reported by Bažant and Pfeiffer,[17] the cross-section of the specimens was rectangular, and the length/depth ratio was 8:3 in all cases. The cross-sectional heights d of the specimens were 38·1, 76·2 and 152·4 mm, the scale range being 1:4. The thickness of the tension specimens b was 19 mm. Notches of depth $d/6$ and thickness 2·5 mm (same thickness for all specimen sizes) were cut into the hardened samples with a diamond saw. The maximum gravel size d_{max} was 12·7 mm, with a maximum grain size of 4·83 mm. The mean compressive strength f'_c was 33·5 MPa, with a standard deviation of 3·79 MPa. The tensile strength was estimated as $f_t = 6\sqrt{f'_c}$ and Young's modulus as $E_c = 57\,000\sqrt{f'_c}$ (f'_c in psi).

A special loading grip was produced for the tensile specimens. It consisted of two tests of aluminium plates compressed together by bolts. The nominal tensile strength can be defined as

$$\sigma_N = \frac{P_u}{bd} \tag{11}$$

where P_u is the maximum load, b is the specimen thickness and d is the width of the ligament. As can be seen from Fig. 11, the two linear versions give very

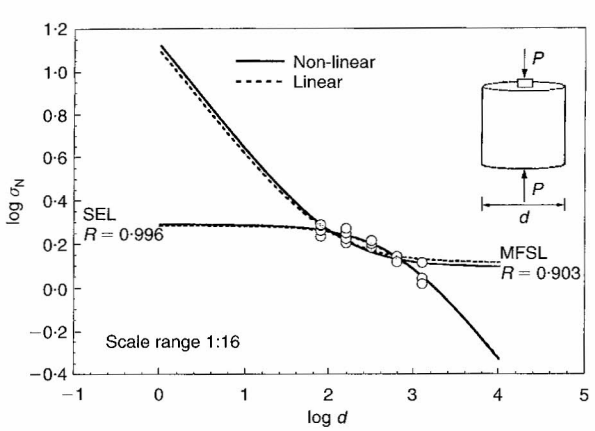

Fig. 10. Application of the MFSL and SEL, as linear and non-linear regressions, to the results of the double-punch tests reported by Marti[9]

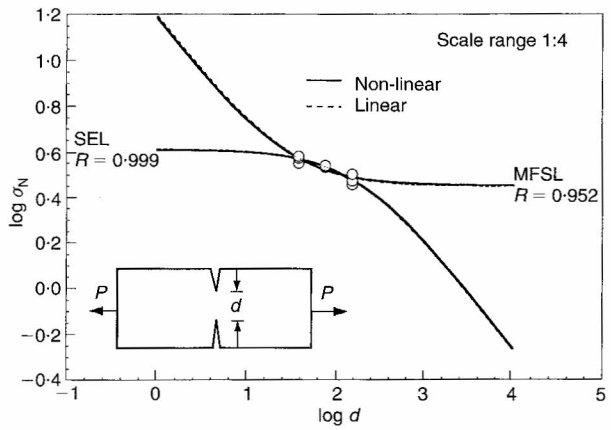

Fig. 11. Application of the MFSL and SEL, as linear and non-linear regressions, to the results of the direct tensile tests reported by Bažant and Pfeiffer[17]

good approximations in both cases, due to the small scale range. It can be noted how the limited scale range of these tests does not permit one to appreciate the complete trend of the change in the strength on varying the dimension. In Fig. 11 the two laws have the same tangent in the specimen range, and a linear law could be used to locally interpolate the data.

The same result can be obtained from the direct tensile test described by Nooru-Mohamed and van Mier.[18] In this study double-edge-notched concrete plate specimens of three different sizes (200 × 200 × 50, 100 × 100 × 50 and 50 × 50 × 50 mm) were tested in traction under displacement control. The a/d ratio of 0·125 was adopted for all specimen sizes (where a is the notch depth and d is the specimen depth). The scale range was 1:4. The maximum aggregate size d_{max} was 2 mm. The concrete was composed of Portland cement type B (500 kg/m^3), with a water/cement ratio of 0·5. The average 28-day compressive strength f'_c and the average splitting tensile strength f'_t were 49·66 and 3·76 MPa, respectively. The tests were controlled by using an average of four vertical LVDTs mounted near the notches.

The nominal tensile strength can be defined as

$$\sigma_N = \frac{P_u}{b(d-2a)} \tag{12}$$

where P_u is the maximum load, b is the specimen thickness and $(d-2a)$ is the ligament width. The MFSL is plotted in Fig. 12, and the corresponding parameters are reported in Table 1.

The last tests are those reported by Carpinteri and Ferro,[27,28] which were performed using a new testing apparatus made up of three orthogonally disposed actuators. The specimens were flared in the centre and their thickness (10 cm) was maintained constant for the entire set, while the transverse dimension was 0·25, 0·5, 1, 2 and 4 times that of the thickness (see Fig.

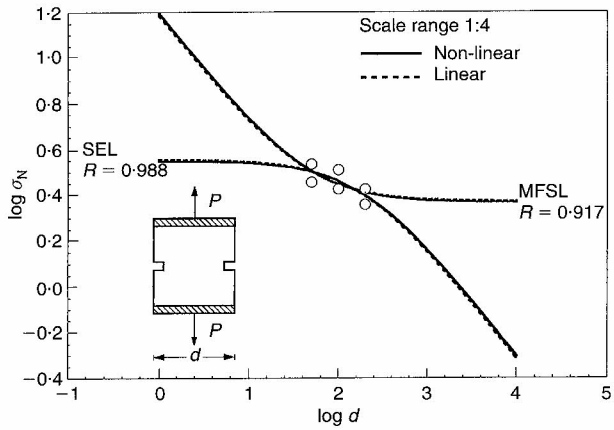

Fig. 12. Application of the MFSL and SEL, as linear and non-linear regressions, to the results of the direct tensile tests reported by Nooru-Mohamed and van Mier[18]

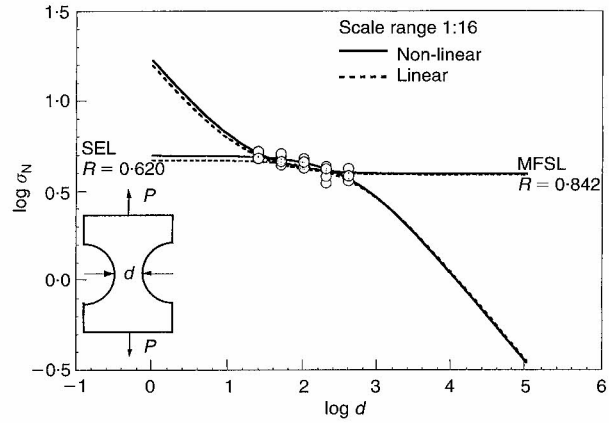

Fig. 13. Application of the MFSL and SEL, as linear and non-linear regressions, to the results of the direct tensile tests reported by Carpinteri and Ferro[27,28]

3(a)). The scale range was 1:16, which is the largest range for the direct tensile tests found in the literature. The test specimen was glued to steel supporting plates so that it could be attached to the load-bearing system. The dimensions of the minimum cross-section of the specimens were $2{\cdot}5 \times 10$, 5×10, 10×10, 20×10 and 40×10 cm. Eight specimens of each size were cast. The water/cement ratio of the concrete mix was 0·5. The maximum gravel size d_{max} was 16 mm, and the mean compressive strength f'_c was 36·9 MPa. The nominal tensile strength can be defined as in equation (11).

The parameters f_t and l_{ch} of the MFSL in this case are equal to 3·67 MPa and 20·32 mm, respectively. The value of f_t, which represents the tensile strength for $d \rightarrow \infty$, is nearly one-tenth of the compressive strength f'_c, while the quantity l_{ch}/d_{max} is equal to 1·27.

The fitting was performed, for both the MFSL and the SEL, using the average values. In this case, the MFSL provides a correlation coefficient R equal to 0·842, whereas fitting data using the SEL gives $R = 0{\cdot}620$ (Fig. 13). The linearization of the MFSL gives an approximation of 1·14% with respect to the non-linear prediction, while the linear version of the SEL presents an approximation of 5·81%. This result, obtained using data from unnotched specimens and over a scale range larger than one order of magnitude, is very significant in confirming the validity of the MFSL.

Conclusions

The relevant literature on the nominal tensile strength indicates that this mechanical parameter is not constant across all the (direct and indirect) tensile tests reported. The nominal tensile strength decreases with an increase in the structure size. The MFSL, proposed by the authors, satisfactorily approximates the trend of the strength over an unbounded size range, whereas the SEL assumes a zero strength for structure sizes tending to infinity. The MFSL aims at extrapolation to obtain reliable values of the nominal tensile strength for very large structures. From the obtained results, we can affirm that it is only possible to obtain correct predictions when tests are done over a scale range greater than one order of magnitude. When the scale range is small, only the tangential slope of the non-linear trend can be captured. In the latter case, a linear (monofractal) scaling law may be used, and only limited predictions can be made.

Finally, we wish to underline how the MFSL linear regression provides an excellent approximation of the nominal tensile strength. It is of practical use and we can suggest its implementation in building codes.

Acknowledgements

The present research was carried out with the financial support of the Ministry of University and Scientific Research (MURST) and the National Research Council (CNR). Financial support from the European Community, THR contract No. ERBFMRXCT 960062, is also gratefully acknowledged.

References

1. Griffith A. A. The phenomena of rupture and flaw in solids. *Philosophical Transactions of the Royal Society, London, Series A*, 1921, **221**, 163–198.
2. Carpinteri A., Chiaia B. and Ferro G. Size effects on nominal tensile strength of concrete structures: multifractality of materials ligaments and dimensional transition from order to disorder. *Materials and Structures (RILEM)*, 1995, **28**, No. 180, 311–317.
3. Carpinteri A. Fractal nature of material microstructure and size effects on apparent mechanical properties. *Mechanics of Materials*, 1994, **18**, 89–101.
4. Carpinteri A. Scaling laws and renormalization groups for

strength and thoroughness of disordered materials. *International Journal of Solids and Structures*, 1994, **31**, 291–302.
5. British Standards Institution. *Method for Determination of Tensile Splitting*. BSI, Milton Keynes, 1983, BS 1881, Part 117.
6. American Society for Testing and Materials. ASTM Philadelphia, C 496.
7. American Society for Testing and Materials. ASTM Philadelphia, C 78.
8. British Standards Institution. *Method for Determination of Flexural Strength*. BSI, Milton Keynes, 1983, BS 1881: Part 118.
9. Marti P. Size effect in double-punch tests on concrete cylinders. *ACI Material Journal*, 1989, **86**, 597–601.
10. Loung M. P. Fracture resistance testing of concrete and rocks. *Proceedings of the 10th International Conference SMIRT, Anaheim, CA*, 1989, 15–20.
11. Evans R. H. and Marathe M. S. Microcracking and stress–strain curves for concrete in tension. *Materials and Structures*, 1968, **1**, 61–64.
12. Reinhardt H. W., Cornelissen A. W. and Hordijk D. A. Tensile tests and failure analysis of concrete. *Journal of Structural Engineering*, 1986, **112**, 2462–2477.
13. Petersson P. E. *Crack Growth and Development of Fracture Zones in Plain Concrete and Similar Materials*. Division of Building Materials, Lund Institute of Technology, 1981, report TVBM-1006.
14. Carpinteri A. and Ferro G. Size effect on tensile fracture properties: a unified explanation based on disorder and fractality of concrete microstructure. *Materials and Structures*, 1994, **27**, 563–571.
15. Rusch H. and Hilsdorf H. K. Deformation characteristics of concrete under axial tension. *Voruntersuchungen, Bericht 44, Munich*, 1963.
16. Hughes B. P. and Chapman G. P. The complete stress–strain curves for concrete in direct tension. *Bulletin RILEM*, 1966, **30**, 95–97.
17. Bažant Z. P. and Pfeiffer P. A. Determination of fracture energy from size effect and brittleness number. *ACI Material Journal*, 1987, Nov.–Dec., 463–480.
18. Nooru-Mohamed M. B. and Van Mier J. G. M. Size effect in mixed mode fracture of concrete. In *Fracture Processes in Concrete, Rock and Ceramics*. Spon, London, 1991, pp. 461–471.
19. Carpinteri A., Chiaia B. and Ferro G. A new explanation for size effects on the flexural strength of concrete. *Magazine of Concrete Research*, 1997, **49**, 45–53.
20. Levenberg K. A method for the solution of certain nonlinear problems in least-squares. *Quarterly Journal of Applied Mathematics*, 1944, **2**, 164–168.
21. Marquardt D. W. An algorithm for least-squares estimation of non-linear parameters. *Journal of Society of Industrial and Applied Mathematics*, 1963, **11**, 431–441.
22. Bažant Z. P. Size effect in blunt fracture: concrete, rock, metal. *Journal of Engineering Mechanics, ASCE*, 1984, **110**, No. 4, 518–535.
23. Carpinteri A., Chiaia B. and Ferro G. *Multifractal Scaling Law: An Extensive Application to Nominal Strength Size Effect of Concrete Structures*. Atti del Dipartimento di Ingegneria Strutturale del Politecnico di Torino, Torino, 1995, No. 51.
24. Hasegawa T., Shioya T. and Okada T. Size effect on splitting tensile strength of concrete. *Proceedings of the JCI, 7th Conference, Tokyo*, 1985, 309–312.
25. Bažant Z. P., Kazemi W. T., Hasegawa T. and Hazars J. Size effects in Brazilian split-cylinder tests: measurements and fracture analysis. *ACI Material Journal*, 1991, **88**, 325–332.
26. Eligehausen R., Bovska P., Cervenka V. and Pukl R. Size effect of the concrete cone failure load of anchor bolts. *Fracture Mechanics of Concrete Structures, Proceedings of 1st FRAMCOS, Breckenridge*, 1992, 517–525.
27. Ferro G. *Effetti di Scala sulla Resistenza a Trazione dei Materiali*. PhD Thesis, Politecnico di Torino, 1994.
28. Carpinteri A. and Ferro G. Scaling behaviour and dual renormalization of experimental tensile softening responses. *Materials and Structures*, 1998, **31**, No. 209, 303–309.

Discussion contributions on this paper should reach the editor by 27 March 1999