Computers & Structures Vol. 21, No. 3, pp. 563–580, 1985
Printed in Great Britain

0045-7949/85 $3.00 + .00
Pergamon Press Ltd.

LATERAL LOADING DISTRIBUTION BETWEEN THE ELEMENTS OF A THREE-DIMENSIONAL CIVIL STRUCTURE

ALBERTO CARPINTERI and ANDREA CARPINTERI
University of Bologna, Istituto di Scienza delle Costruzioni, Bologna, Italy

(*Received* 19 *April* 1984)

Abstract—The problem of the lateral loading distribution between the resistant elements of a three-dimensional civil structure is analyzed. The bracings (shear-walls and frames) are supposed to be axially undeformable and interconnected through floors undeformable in their planes, so that only three degrees-of-freedom per floor are considered.

A general formulation is presented and the internal loading transmitted to the single bracing is expressed through pre-multiplication of the external loading vector by a distribution matrix.

A numerical example is eventually shown, in order to illustrate the use of a FORTRAN computer program, which translates the algebraical formulation into a sequence of elementary operations.

1. INTRODUCTION

The problem of the lateral loading distribution between the resistant elements of a three-dimensional civil structure has been analyzed under its various aspects in recent years. Wynhoven and Adams [1] studied the reduction of the ultimate load carrying capacity of a structure when it is subjected to loads causing torsion. Coull and Irwin [2] presented a simple coefficient method for assessing the load distribution in three-dimensional multistory shear-wall structures. Heidebrecht and Stafford Smith proposed a simple approximate method of analysis for the behavior of open thin-walled shear-walls [3] and of tall wall-frame structures [4], subjected to torsional moments. Stamato and Mancini [5] and Glück and Krauss [6] used a "continuum medium technique" to analyze the three-dimensional interaction of walls and frames, whereas MacLeod and Hosny [7] proposed the use of a discrete matrix method and a frame computer program. More recently, Haris [8] presented an approximate matrix method to determine the lateral load distribution and the deformations in high-rise buildings due to wind loads. Haris considered only one degree-of-freedom per floor corresponding to lateral deformation.

The object of the present paper is the extension of the analysis by Haris [8] to the most general case, when three degrees-of-freedom per floor are considered. A general formulation of the problem is presented and the internal loading transmitted to the single bracing is expressed through pre-multiplication of the external loading vector by a *distribution matrix*. This was defined by Capurso for a wind-bracing system constituted by cantilevers of thin-walled open section in [9]. A numerical example is eventually shown, in order to illustrate the use of a FORTRAN computer program, which translates the algebraical formulation into a sequence of elementary operations.

2. GENERAL FORMULATION OF THE PROBLEM

A general formulation of the problem of the external lateral loading distribution between the bracings of a three-dimensional civil structure will be shown. The structure is idealized as consisting of NTOT bracings interconnected through floors undeformable in their planes and the axial deformations of bracings are not considered. With these hypotheses, the floor movement can be expressed by three displacements: translations in X- and Y-direction of the global coordinate system origin (Fig. 1) and floor rotation.

If N is the number of stories, the external load will be represented by a $3N$-vector F, whose elements are three elementary loads for each floor and, more exactly, two shears and the torsion moment. In the same way, the internal loading transmitted to the ith element will be represented by a $3N$-vector S_i and obtained from the preceding F through a pre-multiplication by a distribution matrix.

Let p_i be the $2N$-vector representing the shear-loadings, on the ith element in the global coordinate system XY (Figs. 1 and 2), and m_i the N-vector representing the torsion moments, so that

$$S_i = \begin{Bmatrix} p_i \\ m_i \end{Bmatrix}. \tag{1}$$

The internal loadings S_i transmitted to the ith bracing and related to the global coordinate system XY are connected with the same loadings S_i^* related to the local coordinate system U_iV_i (Fig. 1):

$$\begin{aligned} p_i^* &= \mathbf{N}_i p_i, \\ m_i^* &= m_i - \psi_i \wedge p_i \cdot u_z, \end{aligned} \tag{2}$$

where the superscript * is used to indicate the loadings in the local coordinate system U_iV_i, $\mathbf{N}_i$ is the orthogonal matrix of transformation from the sys-

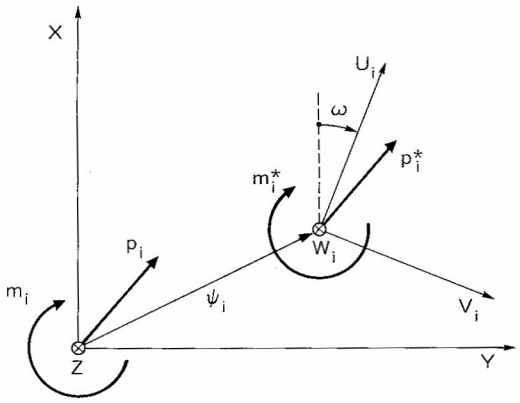

Fig. 1. Global and local coordinate systems. The Z-axis completes the righthanded global system XYZ and W_i completes the right-handed local system $U_iV_iW_i$.

tem XY to the system U_iV_i, ψ_i is the coordinate-vector of the origin of the local system U_iV_i in the global one XY, u_z is the unit vector in the Z-direction (note that $\psi_i \wedge p_i \cdot u_z$ is a scalar triple product). The orthogonal matrix $\mathbf{N}_i$ is

$$\mathbf{N}_i = \begin{bmatrix} \cos\omega & \sin\omega \\ -\sin\omega & \cos\omega \end{bmatrix}, \tag{3}$$

where each element represents a diagonal $N \times N$-matrix and ω is the angle between the X-axis and the U_i-axis (Fig. 1).

Equation (2) may be represented in the matrix form

$$\mathbf{S}_i^* = \mathbf{A}_i S_i, \tag{4}$$

where

$$\mathbf{A}_i = \begin{bmatrix} \mathbf{N}_i & \mathbf{O} \\ -u_z \wedge \psi_i & \mathbf{I} \end{bmatrix}, \tag{5}$$

$\mathbf{I}$ is the identity matrix and $\mathbf{O}$ the null matrix.

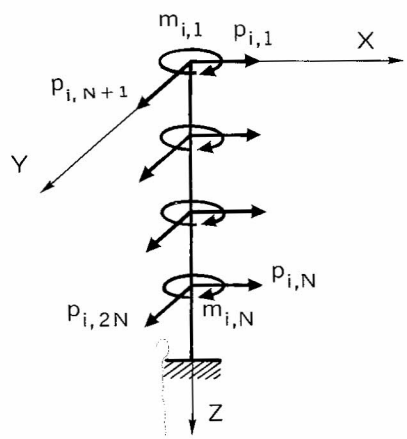

Fig. 2. Internal loadings S_i (transmitted to the ith bracing) in the global coordinate system. Note that the highest floor is indicated with 1 and the lowest with N.

The displacements α_i in the global coordinate system XY are then connected with the displacements α_i^* in the local system U_iV_i:

$$\begin{aligned} \delta_i^* &= \mathbf{N}_i\delta_i, \\ \varphi_i^* &= \varphi_i, \end{aligned} \tag{6}$$

where δ_i represents the translations and φ_i the rotations. Equation (6) may be represented in the matrix form

$$\alpha_i^* = \mathbf{B}_i\alpha_i, \tag{7}$$

where

$$\mathbf{B}_i = \begin{bmatrix} \mathbf{N}_i & \mathbf{O} \\ \mathbf{O} & \mathbf{I} \end{bmatrix}. \tag{8}$$

The internal loadings S_i^* are connected with the displacements α_i^* through the relation

$$S_i^* = \mathbf{K}_i^*\alpha_i^*, \tag{9}$$

where $\mathbf{K}_i^*$ is the stiffness matrix in the local system. Recalling eqns (4) and (7), we get

$$\mathbf{A}_i S_i = \mathbf{K}_i^*\mathbf{B}_i\alpha_i. \tag{10}$$

Pre-multiplying both the members by the inverse $\mathbf{A}_i^{-1}$:

$$S_i = (\mathbf{A}_i^{-1}\mathbf{K}_i^*\mathbf{B}_i)\alpha_i. \tag{11}$$

It follows that the stiffness matrix in the global system for the ith bracing is

$$\mathbf{K}_i = \mathbf{A}_i^{-1}\mathbf{K}_i^*\mathbf{B}_i, \tag{12}$$

where

$$\mathbf{K}_i^* = \begin{bmatrix} \mathbf{K}_{pi}^* & \mathbf{O} \\ \mathbf{O} & \mathbf{K}_{mi}^* \end{bmatrix}. \tag{13}$$

The displacement $3N$-vector α_i of the ith element is connected with the displacement $3N$-vector α of the rigid floors by the relation

$$\alpha_i = \mathbf{T}_i\alpha, \tag{14}$$

where the transformation $3N \times 3N$-matrix $\mathbf{T}_i$ is:

$$\mathbf{T}_i = \begin{bmatrix} \mathbf{I} & \mathbf{C}_i \\ \mathbf{O} & \mathbf{I} \end{bmatrix}. \tag{15}$$

The $2N \times N$-matrix $\mathbf{C}_i$ is:

$$\mathbf{C}_i = \begin{bmatrix} -y_i \\ x_i \end{bmatrix}, \tag{16}$$

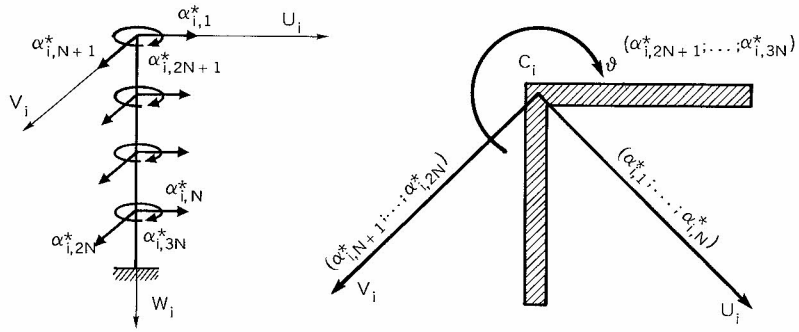

Fig. 3. Degrees-of-freedom of the ith bracing in the local coordinate system.

where each element is a diagonal $N \times N$-matrix and (x_i, y_i) are the components of vector ψ_i. Equation (11) can be re-written

$$S_i = \mathbf{K}_i\mathbf{T}_i\alpha \tag{17}$$

or

$$S_i = \overline{\mathbf{K}}_i\alpha, \tag{18}$$

where $\overline{\mathbf{K}}_i = \mathbf{K}_i\mathbf{T}_i$ is the stiffness of the ith element with respect to the floor displacements. For the global equilibrium we have

$$\sum_{i=1}^{N} S_i = F = \sum_{i=1}^{N} \overline{\mathbf{K}}_i\alpha, \tag{19}$$

or

$$F = \overline{\mathbf{K}}\alpha, \tag{20}$$

where $\overline{\mathbf{K}} = \sum_{i=1}^{N} \overline{\mathbf{K}}_i$ is the global stiffness matrix of the rigid floors. Recalling eqns (18) and (20), we get

$$\alpha = \overline{\mathbf{K}}_i^{-1}S_i = \overline{\mathbf{K}}^{-1}F, \tag{21}$$

and then

$$S_i = \overline{\mathbf{K}}_i\overline{\mathbf{K}}^{-1}F. \tag{22}$$

Equation (22) solves the problem of the external loading distribution between the resistant elements of a building. It is formally analogous to the equation for the distribution of a force between different resistant elements in a plane problem. In fact, the distribution matrix $\overline{\mathbf{K}}_i\overline{\mathbf{K}}^{-1}$ is the product of the partial stiffness matrix by the inverse of the total stiffness matrix, as well as in the plane problem the distribution factor is the product of the partial stiffness by the inverse of the total stiffness. The sum of the distribution matrices is equal to the unit matrix.

3. COMPUTER PROGRAM "DISTRIB"

A FORTRAN program for the lateral loading distribution between the NTOT bracings of a three-dimensional N-stories building is presented, where NTOT $\leqslant$ 20 and $N \leqslant$ 30. The bracings are shear-walls (open or closed thin-walled cantilevers) and

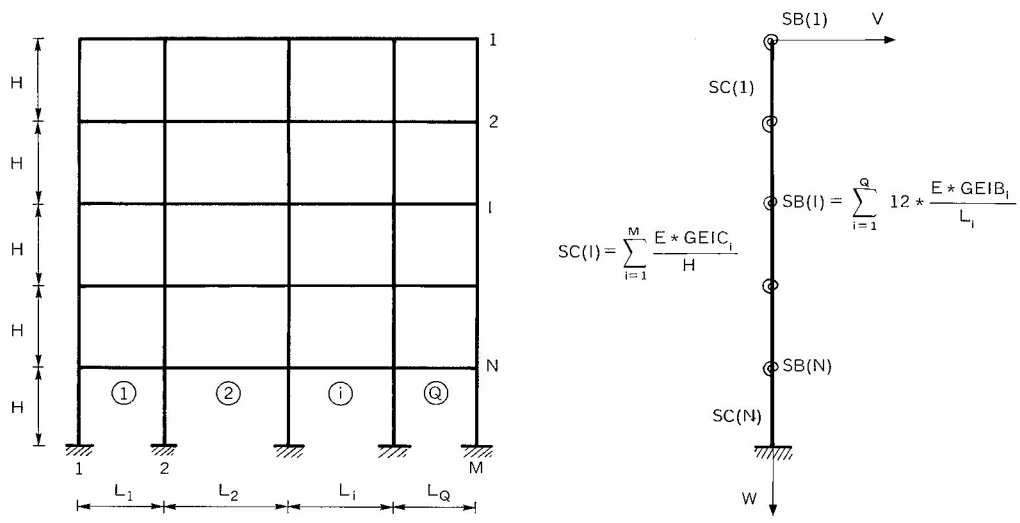

Fig. 4. Equivalent shear-wall simulating a frame [11]: E = elastic modulus (or Young modulus) of the material; GEIB_i = flexural inertia of the ith beam; GEIC_i = flexural inertia of the ith column.

frames. The open thin-walled cantilevers must be consisting of converging plane walls, so that the warping function vanishes. For example, L, T or cruciform cross-sections are contemplated by the program.

The local coordinate system of the ith bracing is assumed with the origin in the center of twist C_i and the U_iV_i axes are parallel to the central ones (Fig. 3). Three degrees-of-freedom per floor are considered: translations in U_i- and V_i-direction of the local system origin and bracing rotation ϑ about the W_i-axis.

Since the external loadings on the building are supposed to be horizontal and acting at the floor levels, a condensation can be carried out [10] and eqn (13) can be transformed as follows:

$$\mathbf{K}^*_{i,\mathrm{CON}} = \begin{bmatrix} \mathbf{K}^*_{U,i,\mathrm{CON}} & \mathbf{O} & \mathbf{O} \\ \mathbf{O} & \mathbf{K}^*_{V,i,\mathrm{CON}} & \mathbf{O} \\ \mathbf{O} & \mathbf{O} & \mathbf{K}^*_{\vartheta,i} \end{bmatrix}. \quad (23)$$

Each frame is simulated by an equivalent shear-wall (Fig. 4) [11], which only presents flexural and shear stiffness in the frame plane V–W, i.e. $\mathbf{K}^*_{U,i,\mathrm{CON}}$ and $\mathbf{K}^*_{\vartheta,i}$ are null matrices. Therefore, one shear-wall at least must be present in the considered building.

Then, the program transforms the condensed stiffness matrices from the local coordinate system to the global one and the obtained matrices are summed. In this way, the condensed stiffness matrix $\overline{\mathbf{K}}$ for the NTOT bracings in the global system is obtained (this matrix is called MATK in the program) and system (20) can be solved.

Recalling eqns (7) and (14), it is possible to obtain

$$\alpha^*_i = \mathbf{B}_i\mathbf{T}_i\alpha, \quad (24)$$

that is the displacements of the ith bracing. The product $\mathbf{B}_i\mathbf{T}_i$ is called MATROT, while α and α^*_i are respectively called ALFA and ALFAAST in the program. Finally, the internal loadings S^*_i are computed for each bracing:

$$S^*_i = \mathbf{K}^*_{i,\mathrm{CON}}\alpha^*_i; \quad (25)$$

S^*_i and $\mathbf{K}^*_{i,\mathrm{CON}}$ are respectively called SAST and KASTCON in the program.

The Flow Chart of the program "DISTRIB" is shown in Fig. 5, while the "INPUT Data Organization" and the "FORTRAN List" are reported in Appendices 1 and 2.

4. NUMERICAL EXAMPLE

A three-story building is analyzed; its plane is shown in Fig. 6. The building consists of four reinforced concrete bracings and the floor height is 300 cm.

Bracing 1 is a closed thin-walled cantilever with a 15 cm constant thickness. Bracing 2 is an open thin-walled cantilever with a 20 cm constant thickness. Bracing 3 is a two-bay frame: the column cross-section is 40 × 40 cm for the upper story and 50 × 50 cm for the two lower stories; the beam cross-section is 60 × 24 cm. Bracing 4 is different from bracing 3 only because the beam span is 520 cm instead of 450 cm. All the sizes of the building and the global and local coordinate systems are shown in Fig. 6.

The external loading consists of four forces F = 15,000 kg, one for each floor (see Fig. 6).

The "INPUT Data Format" is shown in the table of Fig. 7 and the "RESULT PRINTOUT" is reported in Appendix 3. The displacements are measured in cm, the rotations in radians, the forces in kg, the moments in kg cm.

REFERENCES

1. J. H. Wynhoven and P. F. Adams, Behavior of structures under loads causing torsion. *J. Struct. Div.* (*A.S.C.E.*) **98,** 1361–1376 (1972).
2. A. Coull and A. W. Irwin, Model investigations of shear-wall structures. *J. Struct. Div.* (*A.S.C.E.*) **98,** 1223–1237 (1972).
3. A. C. Heidebrecht and B. Stafford Smith, Approximate analysis of open-section shear-walls subject to torsional loading. *J. Struct. Div.* (*A.S.C.E.*) **99,** 2355–2373 (1973).
4. A. C. Heidebrecht and B. Stafford Smith, Approximate analysis of tall wall-frame structures. *J. Struct. Div.* (*A.S.C.E.*) **99,** 199–221 (1973).
5. M. C. Stamato and E. Mancini, Three-dimensional interaction of walls and frames. *J. Struct. Div.* (*A.S.C.E.*) **99,** 2375–2390 (1973).
6. J. Glück and M. Krauss, Stress analysis of group of interconnected thin-walled cantilevers. *J. Struct. Div.* (*A.S.C.E.*) **99,** 2143–2165 (1973).
7. I. A. MacLeod and H. M. Hosny, Frame analysis of shear-wall cores. *J. Struct. Div.* (*A.S.C.E.*) **103,** 2037–2047 (1977).
8. A. K. Haris, Approximate stiffness analysis of high-rise buildings. *J. Struct. Div.* (*A.S.C.E.*) **104,** 681–696 (1978).
9. M. Capurso, Sul calcolo dei sistemi spaziali di controventamento. *Giornale del Genio Civile.* Fasc. 1–2–3, 27–42 (1981).
10. J. L. Humar and J. U. Khandoker, A computer program for three-dimensional analysis of buildings. *Comput. Structures* **11,** 369–387 (1980).
11. P. Pozzati, *Teoria e Tecnica delle Strutture.* Vol. 2, parte II, UTET, 361–377 (1977).

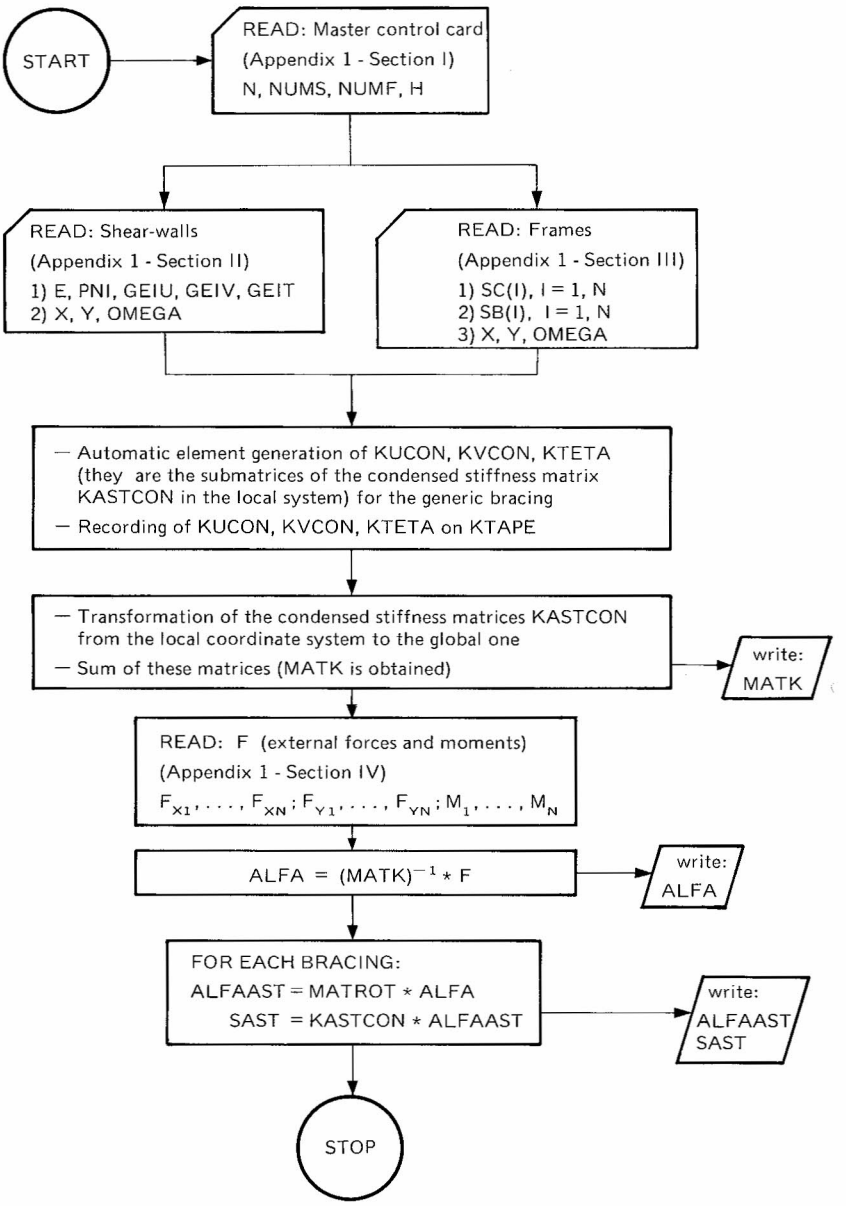

Fig. 5. Flowchart of the computer program DISTRIB.

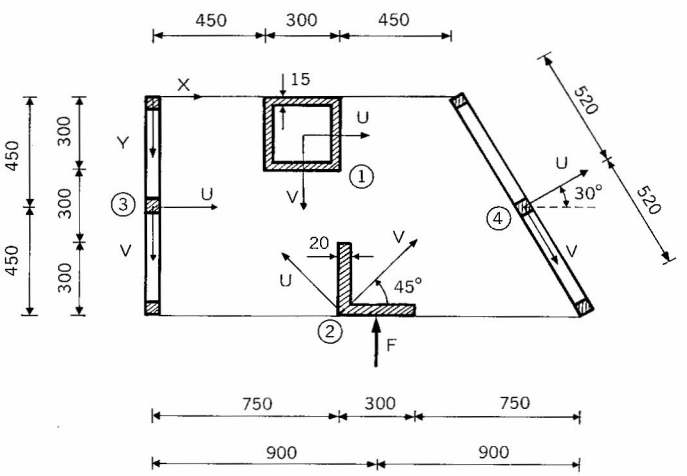

Fig. 6. Plane of an example building.

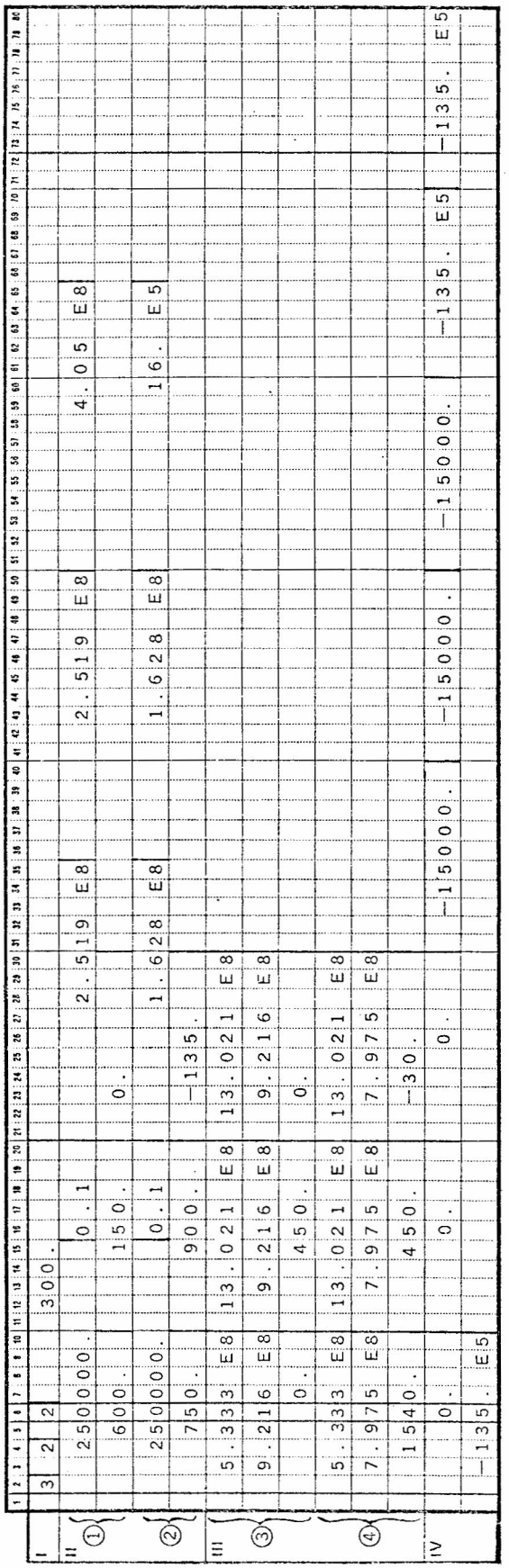

Fig. 7. INPUT Data Format for the considered example (see Fig. 6 and Appendix 1).

APPENDIX 1

INPUT Data Organization

I. *Master control card* [3I2, F14.4].

Columns	Variable	Entry
1–2	N	Number of storeys
3–4	NUMS	Number of shear-walls (open or closed thin-walled cantilevers)
5–6	NUMF	Number of frames
7–20	H	Floor height

II. *Shear-wall input data*. Two cards must be supplied for each shear-wall.

(1) Shear-wall properties [F15.4, F5.3, 3 F15.4]

Columns	Variable	Entry
1–15	E	Elastic modulus of the material
16–20	PNI	Poisson ratio of the material
21–35	GEIU	Flexural inertia of the cross-section about the U-axis
36–50	GEIV	Flexural inertia of the cross-section about the V-axis
51–65	GEIT	Torsional inertia of the cross-section (Saint Venant's Theory)

(2) Local coordinate system for the shear-wall [3 F10.5]

Columns	Variable	Entry
1–10	X	X-coordinate (in the global system) of the local system origin
11–20	Y	Y-coordinate (in the global system) of the local system origin
21–30	OMEGA	Angle ω in degrees (ω is the angle by which the X-axis has to rotate to achieve the U-axis)

III. *Frame input data*. Three card sets must be supplied for each frame.

(1) SC(I), where I = 1, N[8 F10.3]

$$\mathrm{SC(I)} = \sum_{i=1}^{M} \frac{E^{*}\mathrm{GEIC}_i}{H},$$

where E, GEIC_i and H are related to the M columns under the Ith floor (see Fig. 4).

(2) SB(I), where I = 1, N [8F10.3]

$$\mathrm{SB(I)} = \sum_{i=1}^{Q} 12^{*} \frac{E^{*}\mathrm{GEIB}_i}{L_i},$$

where E, GEIB_i and L_i are related to the $Q = M - 1$ beams of the Ith floor (see Fig. 4).

(3) Local coordinate system for the frame [3 F10.5]

Columns	Variable	Entry
1–10	X	X-coordinate (in the global system) of the local system origin
11–20	Y	Y-coordinate (in the global system) of the local system origin
21–30	OMEGA	Angle ω in degrees

IV. *Vector* F *of the external forces and moments* [8 F10.3]. The loads are applied to the global system origin; they are two shears (X-direction and Y-direction forces) and one torsion moment (Z-axis moment) for each floor. The input consists of $3N$ elements ordered as follows: N forces in X-direction, N forces in Y-direction, N Z-axis torsion moments.

APPENDIX 2

Fortran List

```
C     ******************************************************************
C     ******************************************************************
C     **                                                              **
C     **  HORIZONTAL LOAD DISTRIBUTION BETWEEN SHEARWALLS AND FRAMES  **
C     **  IN A N-STOREYS THREE-DIMENSIONAL BUILDING                   **
C     **        NUMS = NUMBER OF SHEARWALLS (THEY ARE OPEN OR CLOSED  **
C     **               THIN-WALLED CANTILEVERS. THE OPEN THIN-WALLED  **
C     **               CANTILEVERS MUST BE CONSISTING OF CONVERGING   **
C     **               PLANE WALLS, SO THAT THE WARPING FUNCTION      **
C     **               VANISHES)                                      **
C     **        NUMF = NUMBER OF FRAMES                               **
C     **        NTOT = NUMS + NUMF = TOTAL NUMBER OF BRACINGS         **
C     **           N = NUMBER OF STOREYS                              **
C     **                                                              **
C     ******************************************************************
C     ******************************************************************
C
C
C
C
      PROGRAM DISTRIB(INPUT,OUTPUT,TAPE5=INPUT,TAPE6=OUTPUT,TAPE1,TAPE2,
     $TAPE3,TAPE4,TAPE7,TAPE8,TAPE9,TAPE10,TAPE11,TAPE12,TAPE13,TAPE14,T
     $APE15,TAPE16,TAPE17,TAPE18,TAPE19,TAPE20,TAPE21,TAPE22)
C        NOTA BENE      THE FOLLOWING DIMENSIONS ARE VALID FOR
C                       NTOT LESS OR EQUAL 20
C                         N  LESS OR EQUAL 30
```

```
      REAL A(90,91),KAB(30,30),KAA(30,30),V(30),KUCON(30,30),KVCON(30,30
     1),KTETA(30,30),MATK(90,91),KASTCON(90,90),MATROT(90,90),ALFAAST(90
     2),SAST(90),SC(30),SB(30),VX(20),VY(20),OMEGA(20)
      DIMENSION ITAPE(20)
      ITAPE(1)=1
      ITAPE(2)=2
      ITAPE(3)=3
      ITAPE(4)=4
      ITAPE(5)=7
      ITAPE(6)=8
      ITAPE(7)=9
      ITAPE(8)=10
      ITAPE(9)=11
      ITAPE(10)=12
      ITAPE(11)=13
      ITAPE(12)=14
      ITAPE(13)=15
      ITAPE(14)=16
      ITAPE(15)=17
      ITAPE(16)=18
      ITAPE(17)=19
      ITAPE(18)=20
      ITAPE(19)=21
      ITAPE(20)=22
C        INPUT DATA PRINTOUT
      WRITE(6,8)
    8 FORMAT(1H1,//,45X,17(1H*),/,45X,1H*,15X,1H*,/,45X,17H*  INPUT  DAT
     $A  *,/,45X,1H*,15X,1H*,/,45X,17(1H*))
      READ(5,10) N,NUMS,NUMF,H
   10 FORMAT(3I2,F14.4)
C        INPUT DATA PRINTOUT
      WRITE(6,12) N,NUMS,NUMF,H
   12 FORMAT(7(/),10X,*N = NUMBER OF STOREYS = *,I2,/,10X,*NUMS = NUMBER
     $ OF SHEARWALLS = *,I2,/,10X,*NUMF = NUMBER OF FRAMES = *,I2,/,10X,
     $*H = FLOOR HEIGHT = *,E10.4,//////)
      IF(N.GT.30) GO TO 4460
      IF(NUMS.EQ.0) GO TO 4465
      NTOT=NUMS+NUMF
      IF(NTOT.GT.20) GO TO 4480
      NN=N*2
      NNN=N*3
      NL=N-1
      N1=N+1
C        THE ELEMENTS OF THE MATRIX MATK ARE INITIALIZED
C        MATK WILL BE UTILIZED AFTERWARDS (SEE SUBROUTINE ROTAT)
      DO 13 I=1,NNN
      DO 13 J=1,NNN
   13 MATK(I,J)=0.
C-----------------------------------------------------------------------
C-----------------------------------------------------------------------
C
C                    ****************
C                    *              *
C                    *  SHEARWALLS  *
C                    *              *
C                    ****************
C
      DO 185 K=1,NUMS
      KTAPE=ITAPE(K)
C        READ SOME QUANTITIES RELATED TO THE GENERIC SHEARWALL
C           E = ELASTIC MODULUS (OR YOUNG MODULUS) OF THE MATERIAL
C           PNI = POISSON RATIO OF THE MATERIAL
C           GEIU = FLEXURAL INERTIA ABOUT THE U-AXIS FOR THE CROSS-SECTION
C           GEIV = FLEXURAL INERTIA ABOUT THE V-AXIS FOR THE CROSS-SECTION
C           GEIT = TORSIONAL INERTIA FOR THE CROSS-SECTION (SAINT VENANT THEORY)
      READ(5,14) E,PNI,GEIU,GEIV,GEIT
   14 FORMAT(F15.4,F5.3,3F15.4)
C        INPUT DATA PRINTOUT
      WRITE(6,17) K,E,PNI,GEIU,GEIV,GEIT
   17 FORMAT(///,2X,3HK =,I2,* (SHEARWALL)*,/,2X,17(1H-),4X,*E = ELASTIC
     1 MODULUS (OR YOUNG MODULUS) OF THE MATERIAL*,9X,*=*,F13.5,/,23X,*P
     2NI = POISSON RATIO OF THE MATERIAL*,28X,*= *,F12.4,/,23X,*GEIU = F
     3LEXURAL INERTIA ABOUT THE U-AXIS FOR THE CROSS-SECTION =*,E13.5,/,
     423X,*GEIV = FLEXURAL INERTIA ABOUT THE V-AXIS FOR THE CROSS-SECTIO
     5N =*,E13.5,/,23X,*GEIT = TORSIONAL INERTIA FOR THE CROSS-SECTION*,
     617X,*=*,E13.5)
      GU=E*GEIU/(H**3)
      GV=E*GEIV/(H**3)
      GT=E*GEIT/H
      GPNI=(1.)/((2.)+(2.)*PNI)
C-----------------------------------------------------------------------
C
C     ------------------------------------------------------------------
C     I                                                                I
C     I  AUTOMATIC ELEMENT GENERATION OF KUCON FOR THE GENERIC SHEARWALL  I
C     I  KUCON = CONDENSED STIFFNESS MATRIX IN THE LOCAL COORDINATE SYSTEM  I
C     I          FOR THE GENERIC SHEARWALL WHEN THIS IS LOADED BY HORIZON-  I
C     I          TAL FORCES IN U-DIRECTION AT THE FLOOR LEVELS            I
C     I                                                                I
C     ------------------------------------------------------------------
C
C                        I KAA I KAB I
C     KU = (E*GEIV/H)*I-----I-----I = STIFFNESS MATRIX IN THE LOCAL COORDINATE
C                        I KBA I KBB I   SYSTEM FOR THE GENERIC SHEARWALL WHEN THIS
```

```
C                                       IS LOADED BY HORIZONTAL FORCES IN U-DIREC-
C                                       TION AT THE FLOOR LEVELS
      DO 20 I=1,N
      DO 20 J=1,NN
   20 A(I,J)=0.
C                                                                I      I      I
C        SUBMATRIX A IS OBTAINED BY JOINING KBB AND KBA      A = I KBB I KBA I
C                                                                I      I      I
      DO 30 I=1,N
      DO 30 J=1,N
   30 KAB(I,J)=0.
      DO 35 I=1,N
      DO 35 J=1,N
   35 KAA(I,J)=0.
C                    SUBMATRIX A
      A(1,1)=4.
      IF(N.EQ.1) GO TO 56
      NL=N-1
      DO 40 I=1,NL
      J=I+1
      A(I,J)=2.
   40 A(J,I)=2.
      DO 50 I=2,N
   50 A(I,I)=8.
   56 A(1,N1)=-6.
      IF(N.EQ.1) GO TO 75
      DO 60 I=1,NL
      J=N1+I
   60 A(I,J)=6.
      DO 70 I=2,N
      II=I-1
      J=N+II
   70 A(I,J)=-6.
C                    SUBMATRIX KAB
   75 KAB(1,1)=-6.
      IF(N.EQ.1) GO TO 88
      DO 80 I=1,NL
      J=I+1
      KAB(I,J)=-6.
   80 KAB(J,I)=6.
C                    SUBMATRIX KAA
   88 KAA(1,1)=12.
      IF(N.EQ.1) GO TO 99
      DO 90 I=2,N
   90 KAA(I,I)=24.
      DO 98 I=1,NL
      J=I+1
      KAA(I,J)=-12.
   98 KAA(J,I)=-12.
C
C        KUCON = (E*GEIV/(H**3)) * (KAA-KAB*(((KBB)**(-1))*KBA))
C
C ----------
C I STEP 1 I  ((KBB)**(-1))*KBA
C ----------  GAUSSIAN REDUCTION IS APPLIED
      CALL TRIANG(A,N,NN)
   99 CONTINUE
      CALL SOST(A,N,NN)
C ----------
C I STEP 2 I  KAB*(((KBB)**(-1))*KBA)
C ----------  THE RESULT IS MEMORIZED IN THE FIRST N COLUMNS OF KAB
      CALL MOLTIP(A,KAB,V,N)
C ----------
C I STEP 3 I  (KAA-KAB*(((KBB)**(-1))*KBA))
C ----------  THE RESULT IS MEMORIZED IN KAA
      CALL SOTTR(KAA,KAB,N)
      DO 100 J=1,N
      DO 100 I=1,N
  100 KUCON(I,J)=GV*KAA(I,J)
C
C     ----------------------------------------------------------------------
C     I                                                                    I
C     I  AUTOMATIC ELEMENT GENERATION OF KVCON FOR THE GENERIC SHEARWALL   I
C     I  KVCON = CONDENSED STIFFNESS MATRIX IN THE LOCAL COORDINATE SYSTEM I
C     I          FOR THE GENERIC SHEARWALL WHEN THIS IS LOADED BY HORIZON- I
C     I          TAL FORCES IN V-DIRECTION AT THE FLOOR LEVELS             I
C     I                                                                    I
C     ----------------------------------------------------------------------
C
C                        I KAA I KAB I
C     KV = (E*GEIU/H)*I-----I-----I = STIFFNESS MATRIX IN THE LOCAL COORDINATE
C                        I KBA I KBB I   SYSTEM FOR THE GENERIC SHEARWALL WHEN THIS
C                                        IS LOADED BY HORIZONTAL FORCES IN V-DIREC-
C                                        TION AT THE FLOOR LEVELS
      DO 105 I=1,N
      DO 105 J=1,NN
  105 A(I,J)=0.
C                                                                I      I      I
C        SUBMATRIX A IS OBTAINED BY JOINING KBB AND KBA      A = I KBB I KBA I
C                                                                I      I      I
      DO 110 I=1,N
      DO 110 J=1,N
  110 KAB(I,J)=0.
      DO 115 I=1,N
```

```
      DO 115 J=1,N
  115 KAA(I,J)=0.
C                    SUBMATRIX A
      A(1,1)=4.
      IF(N.EQ.1) GO TO 128
      DO 120 I=1,NL
      J=I+1
      A(I,J)=2.
  120 A(J,I)=2.
      DO 125 I=2,N
  125 A(I,I)=8.
  128 A(1,N1)=-6.
      IF(N.EQ.1) GO TO 138
      DO 130 I=1,NL
      J=N1+I
  130 A(I,J)=6.
      DO 135 I=2,N
      II=I-1
      J=N+II
  135 A(I,J)=-6.
C                    SUBMATRIX KAB
  138 KAB(1,1)=-6.
      IF(N.EQ.1) GO TO 147
      DO 140 I=1,NL
      J=I+1
      KAB(I,J)=-6.
  140 KAB(J,I)=6.
C                    SUBMATRIX KAA
  147 KAA(1,1)=12.
      IF(N.EQ.1) GO TO 157
      DO 150 I=2,N
  150 KAA(I,I)=24.
      DO 155 I=1,NL
      J=I+1
      KAA(I,J)=-12.
  155 KAA(J,I)=-12.
C
C        KVCON = (E*GEIU/(H**3)) * (KAA-KAB*(((KBB)**(-1))*KBA))
C
      CALL TRIANG(A,N,NN)
  157 CONTINUE
      CALL SOST(A,N,NN)
      CALL MOLTIP(A,KAB,V,N)
      CALL SOTTR(KAA,KAB,N)
      DO 158 J=1,N
      DO 158 I=1,N
  158 KVCON(I,J)=GU*KAA(I,J)
C
C     ------------------------------------------------------------------
C     I                                                                I
C     I  AUTOMATIC ELEMENT GENERATION OF KTETA FOR THE GENERIC SHEARWALL  I
C     I  KTETA = TORSIONAL STIFFNESS MATRIX FOR THE GENERIC SHEARWALL    I
C     I                                                                I
C     ------------------------------------------------------------------
      DO 160 J=1,N
      DO 160 I=1,N
  160 KTETA(I,J)=0.
      KTETA(1,1)=GT*GPNI
      IF(N.EQ.1) GO TO 166
      DO 162 I=2,N
  162 KTETA(I,I)=GT*((2.)*GPNI)
      DO 164 I=1,NL
      J=I+1
      KTETA(I,J)=GT*(-GPNI)
  164 KTETA(J,I)=KTETA(I,J)
  166 CONTINUE
C-----------------------------------------------------------------------
C
C     ------------------------------------------------------------------
C     I                                                                I
C     I  KUCON,KVCON AND KTETA OF THE GENERIC SHEARWALL ARE MEMORIZED ON  I
C     I  KTAPE.   THESE MATRICES WILL BE UTILIZED WHEN BETA (VECTOR OF   I
C     I  DISPLACEMENTS AND ROTATIONS IN THE LOCAL COORDINATE SYSTEM) AND  I
C     I  S (VECTOR OF FORCES AND MOMENTS FOR THE GENERIC BRACING) ARE    I
C     I  COMPUTED FOR EACH BRACING                                       I
C     I                                                                I
C     ------------------------------------------------------------------
      WRITE (KTAPE) ((KUCON(L,M),L=1,N),M=1,N),((KVCON(L,M),L=1,N),M=1,N
     $),((KTETA(L,M),L=1,N),M=1,N)
C-----------------------------------------------------------------------
C
C     ------------------------------------------------------------------
C     I                                                                I
C     I  THE PROGRAM TRANSFORMS THE CONDENSED STIFFNESS MATRICES FROM THE  I
C     I  LOCAL COORDINATE SYSTEM TO THE GLOBAL ONE.   THEN THE OBTAINED   I
C     I  MATRICES ARE SUMMED AND MATK IS OBTAINED AT THE END OF  DO 185   I
C     I  (MATK = CONDENSED STIFFNESS MATRIX IN THE GLOBAL COORDINATE SYS- I
C     I  TEM FOR THE NUMS SHEARWALLS)                                    I
C     I                                                                I
C     ------------------------------------------------------------------
C
C        READ SOME QUANTITIES LOCATING THE LOCAL COORDINATE SYSTEM OF THE
C        GENERIC SHEARWALL
C           X,Y = COORDINATES (IN THE GLOBAL SYSTEM) OF THE LOCAL SYSTEM ORIGIN
```

```
C           OMEGA = ANGLE THAT THE X-AXIS OF THE GLOBAL SYSTEM HAS TO ROTATE
C                   IN ORDER TO ACHIEVE THE U-AXIS OF THE LOCAL SYSTEM
      READ(5,180) VX(K),VY(K),OMEGA(K)
  180 FORMAT(3F10.5)
      X=VX(K)
      Y=VY(K)
      SINOMEG=SIND(OMEGA(K))
      COSOMEG=COSD(OMEGA(K))
C        INPUT DATA PRINTOUT
      WRITE(6,182) X,Y,OMEGA(K)
  182 FORMAT(/,23X,*COORDINATES OF THE LOCAL SYSTEM ORIGIN*,10X,*X =*,F1
     10.4,10X,*Y =*,F10.4,/,23X,*OMEGA (ANGLE THAT X-AXIS HAS TO ROTATE
     2CLOCKWISE IN ORDER TO ACHIEVE U AXIS)  = *,F10.5)
      CALL ROTAT(SINOMEG,COSOMEG,X,Y,N,NN,MATK,KUCON,KVCON,KTETA)
  185 CONTINUE
      IF(NUMF.EQ.0) GO TO 910
C-----------------------------------------------------------------------------
C-----------------------------------------------------------------------------
C
C                   **************
C                   *            *
C                   *   FRAMES   *
C                   *            *
C                   **************
C
      NUMS1=NUMS+1
      DO 900 K=NUMS1,NTOT
      KTAPE=ITAPE(K)
C        READ THE SC(I) AND SB(I) FOR THE GENERIC FRAME, WHERE I=1,N
C           SC(I) = SUMMATION OF E*GEIC/H
C                   (E,GEIC,H ARE RELATED TO THE M COLUMNS UNDER THE I-TH FLOOR)
C           SB(I) = SUMMATION OF 12*E*GEIB/L
C                   (E,GEIB,L ARE RELATED TO THE Q BEAMS OF THE I-TH FLOOR)
      READ(5,190) (SC(I),I=1,N)
  190 FORMAT(8F10.3)
      READ(5,190) (SB(I),I=1,N)
C        INPUT DATA PRINTOUT
      WRITE(6,197) K
  197 FORMAT(6(/),2X,3HK =,I2,* (FRAME)*,/,2X,13(1H-),8X,*SC(I), WHERE I
     1=1,N*,8X,*SC(I) = SUMMATION OF E*,1H*,*GEIC/H*,/,57X,*(E,GEIC,H AR
     2E RELATED TO THE M COLUMNS UNDER THE I-TH FLOOR)*,/,23X,*SB(I), WH
     3ERE I=1,N*,8X,*SB(I) = SUMMATION OF 12*,3H*E*,*GEIB/L*,/,57X,*(E,G
     4EIB,L ARE RELATED TO THE Q BEAMS OF THE I-TH FLOOR)*)
      DO 200 I=1,N
      WRITE(6,199) I,SC(I),I,SB(I)
  199 FORMAT(/,35X,3HSC(,I2,3H) =,E12.5,20X,3HSB(,I2,3H) =,E12.5)
  200 CONTINUE
C-----------------------------------------------------------------------------
C
C     ---------------------------------------------------------------------
C     I                                                                   I
C     I  AUTOMATIC ELEMENT GENERATION OF KVCON FOR THE GENERIC FRAME      I
C     I  KVCON = CONDENSED STIFFNESS MATRIX IN THE LOCAL COORDINATE SYSTEM I
C     I          FOR THE GENERIC FRAME.  SUCH FRAME IS SIMULATED BY AN E- I
C     I          QUIVALENT SHEARWALL LOADED BY HORIZONTAL FORCES IN V-DI- I
C     I          RECTION AT THE FLOOR LEVELS                              I
C     I                                                                   I
C     ---------------------------------------------------------------------
C
C          I KAA I KAB I
C     KV = I-----I-----I = STIFFNESS MATRIX IN THE LOCAL COORDINATE SYSTEM FOR
C          I KBA I KBB I   THE GENERIC FRAME (SIMULATED BY AN EQUIVALENT SHEAR-
C                          WALL LOADED BY HORIZONTAL FORCES IN V-DIRECTION AT
C                          THE FLOOR LEVELS)
      DO 204 I=1,N
      DO 204 J=1,NN
  204 A(I,J)=0.
C                                                                I     I     I
C        SUBMATRIX A IS OBTAINED BY JOINING KBB AND KBA      A = I KBB I KBA I
C                                                                I     I     I
      DO 207 I=1,N
      DO 207 J=1,N
      KAB(I,J)=0.
  207 KAA(I,J)=0.
C                   SUBMATRIX A
      A(1,1)=4*SC(1)+SB(1)
      IF(N.EQ.1) GO TO 225
      DO 210 I=1,NL
      J=I+1
  210 A(J,J)=4*SC(I)+4*SC(J)+SB(J)
      DO 220 I=1,NL
      J=I+1
      A(I,J)=2*SC(I)
  220 A(J,I)=A(I,J)
  225 A(1,N1)=-6*SC(1)/H
      IF(N.EQ.1) GO TO 255
      DO 230 I=1,NL
      II=I+1
      J=N1+I
  230 A(II,J)=(SC(I)-SC(II))*6/H
      DO 240 I=1,NL
      J=N1+I
  240 A(I,J)=6*SC(I)/H
      DO 250 I=2,N
```

```
      II=I-1
      J=N+II
  250 A(I,J)=-6*SC(II)/H
C                    SUBMATRIX KAB
  255 KAB(1,1)=-6*SC(1)/H
      IF(N.EQ.1) GO TO 275
      DO 260 I=1,NL
      II=I+1
  260 KAB(II,II)=(SC(I)-SC(II))*6/H
      DO 270 I=1,NL
      J=I+1
      KAB(I,J)=-6*SC(I)/H
  270 KAB(J,I)=-KAB(I,J)
C                    SUBMATRIX KAA
  275 KAA(1,1)=12*SC(1)/(H**2)
      IF(N.EQ.1) GO TO 298
      DO 280 I=1,NL
      II=I+1
  280 KAA(II,II)=(SC(I)+SC(II))*12/(H**2)
      DO 290 I=1,NL
      J=I+1
      KAA(I,J)=-12*SC(I)/(H**2)
  290 KAA(J,I)=KAA(I,J)
C        THE PROGRAM CALCULATES THE CONDENSED STIFFNESS MATRIX KVCON (IN THE
C        LOCAL COORDINATE SYSTEM) FOR THE GENERIC FRAME WHEN THIS IS LOADED BY
C        HORIZONTAL FORCES IN V-DIRECTION AT THE FLOOR LEVELS.  THE FOLLOWING
C        OPERATIONS ARE ANALOGOUS TO THOSE PREVIOUSLY DONE FOR THE SHEARWALLS.
C        KVCON IS MEMORIZED IN THE SUBMATRIX KAA
      CALL TRIANG(A,N,NN)
  298 CONTINUE
      CALL SOST(A,N,NN)
      CALL MOLTIP(A,KAB,V,N)
      CALL SOTTR(KAA,KAB,N)
      DO 300 J=1,N
      DO 300 I=1,N
  300 KVCON(I,J)=KAA(I,J)
C
C     ------------------------------------------------------------------
C     I                                                                I
C     I  AUTOMATIC ELEMENT GENERATION OF KUCON AND KTETA FOR THE GENERIC  I
C     I  FRAME                                                         I
C     I  KUCON = CONDENSED STIFFNESS MATRIX IN THE LOCAL COORDINATE SYSTEM  I
C     I          FOR THE GENERIC FRAME WHEN THIS IS LOADED BY HORIZONTAL  I
C     I          FORCES IN U-DIRECTION AT THE FLOOR LEVELS               I
C     I  KTETA = TORSIONAL STIFFNESS MATRIX FOR THE GENERIC FRAME        I
C     I                                                                I
C     ------------------------------------------------------------------
      DO 600 J=1,N
      DO 500 I=1,N
      KUCON(I,J)=0.
      KTETA(I,J)=0.
  500 CONTINUE
  600 CONTINUE
C-----------------------------------------------------------------------
C
C     ------------------------------------------------------------------
C     I                                                                I
C     I  KUCON,KVCON AND KTETA OF THE GENERIC FRAME ARE MEMORIZED ON KTAPE.  I
C     I  THESE MATRICES WILL BE UTILIZED WHEN BETA (VECTOR OF DISPLACEMENTS  I
C     I  AND ROTATIONS IN THE LOCAL COORDINATE SYSTEM) AND S (VECTOR OF  I
C     I  FORCES AND MOMENTS FOR THE GENERIC BRACING) ARE COMPUTED FOR EACH  I
C     I  BRACING                                                       I
C     I                                                                I
C     ------------------------------------------------------------------
      WRITE (KTAPE) ((KUCON(L,M),L=1,N),M=1,N),((KVCON(L,M),L=1,N),M=1,N
     $),((KTETA(L,M),L=1,N),M=1,N)
C-----------------------------------------------------------------------
C
C     ------------------------------------------------------------------
C     I                                                                I
C     I  THE PROGRAM TRANSFORMS THE CONDENSED STIFFNESS MATRICES FROM THE  I
C     I  LOCAL COORDINATE SYSTEM TO THE GLOBAL ONE.   THEN THE OBTAINED  I
C     I  MATRICES ARE SUMMED AND MATK IS OBTAINED AT THE END OF  DO 900  I
C     I  (MATK = CONDENSED STIFFNESS MATRIX IN THE GLOBAL COORDINATE SYS-  I
C     I  TEM FOR THE NTOT BRACINGS)                                    I
C     I                                                                I
C     ------------------------------------------------------------------
C
C        READ SOME QUANTITIES LOCATING THE LOCAL COORDINATE SYSTEM OF THE
C        GENERIC FRAME
C           X,Y = COORDINATES (IN THE GLOBAL SYSTEM) OF THE LOCAL SYSTEM ORIGIN
C           OMEGA = ANGLE THAT THE X-AXIS OF THE GLOBAL SYSTEM HAS TO ROTATE
C                   IN ORDER TO ACHIEVE THE U-AXIS OF THE LOCAL SYSTEM
      READ(5,180) VX(K),VY(K),OMEGA(K)
      X=VX(K)
      Y=VY(K)
      SINOMEG=SIND(OMEGA(K))
      COSOMEG=COSD(OMEGA(K))
C        INPUT DATA PRINTOUT
      WRITE(6,182) X,Y,OMEGA(K)
      CALL ROTAT(SINOMEG,COSOMEG,X,Y,N,NN,MATK,KUCON,KVCON,KTETA)
  900 CONTINUE
  910 CONTINUE
C-----------------------------------------------------------------------
```

```
C-----------------------------------------------------------------------------
C         THE SYSTEM      MATK * ALFA = F      IS SOLVED
C         MATK = CONDENSED STIFFNESS MATRIX IN THE GLOBAL COORDINATE SYSTEM
C                FOR THE NTOT BRACINGS
C         ALFA = VECTOR OF THE FLOOR DISPLACEMENTS IN THE GLOBAL COORDINATE
C                SYSTEM (TRANSLATIONS OF THE GLOBAL COORDINATE SYSTEM ORIGIN
C                AND FLOOR ROTATIONS)
C         F = VECTOR OF THE KNOWN TERMS. IT IS MEMORIZED IN THE (3N+1)-TH
C             COLUMN OF THE MATRIX MATK
      NNNN=3*N+1
      READ(5,1111) (MATK(I,NNNN),I=1,NNN)
 1111 FORMAT(8F10.3)
C         INPUT DATA PRINTOUT
      WRITE(6,1112) NTOT
 1112 FORMAT(9(/),8X,*VECTOR F OF THE KNOWN TERMS, I.E. EXTERNAL FORCES
     $AND MOMENTS TO DISTRIBUTE BETWEEN THE *,I2,* BRACINGS*,/)
      DO 1120 I=1,N
      WRITE(6,1118) I,MATK(I,NNNN)
 1118 FORMAT(/,15X,3HFX(,I2,3H) =,E12.5)
 1120 CONTINUE
      DO 1130 I=1,N
      J=I+N
      WRITE(6,1125) I,MATK(J,NNNN)
 1125 FORMAT(/,15X,3HFY(,I2,3H) =,E12.5)
 1130 CONTINUE
      DO 1140 I=1,N
      J=I+NN
      WRITE(6,1135) I,MATK(J,NNNN)
 1135 FORMAT(/,15X,3H M(,I2,3H) =,E12.5)
 1140 CONTINUE
      WRITE(6,1145)
 1145 FORMAT(//,1X,130(1H$))
C         RESULT PRINTOUT
      WRITE(6,1150)
 1150 FORMAT(1H1,//,45X,15(1H*),/,45X,1H*,13X,1H*,/,45X,15H*   RESULTS
     $ *,/,45X,1H*,13X,1H*,/,45X,15(1H*))
      WRITE(6,1155) NTOT,(((I,J,MATK(I,J)),J=1,NNN),I=1,NNN)
 1155 FORMAT(///,10X,*CONDENSED STIFFNESS MATRIX (IN THE GLOBAL COORDINA
     1TE SYSTEM) FOR THE NTOT BRACINGS ( NTOT = *,I2,* )*,//,1620(/,1X,5
     2(5HMATK(,I2,1H,,I2,2H)=,E12.5,2X)))
      CALL TRIANG(MATK,NNN,NNNN)
      CALL SOSTIT(MATK,NNN,NNNN)
C-----------------------------------------------------------------------------
C         ALFAAST IS COMPUTED FOR EACH BRACING  -  ALFAAST = MATROT * ALFA
C            ALFAAST = ALFA ASTERISK = VECTOR OF THE DISPLACEMENTS IN THE LOCAL
C                      COORDINATE SYSTEM (TRASLATIONS OF THE LOCAL COORDINATE
C                      SYSTEM ORIGIN AND ROTATIONS)
C            MATROT = ROTATION MATRIX
C
C         SAST IS COMPUTED FOR EACH BRACING  -  SAST = KASTCON * ALFAAST
C            SAST = VECTOR OF THE FORCES AND MOMENTS IN THE LOCAL COORDINATE
C                   SYSTEM
C            KASTCON = CONDENSED STIFFNESS MATRIX IN THE LOCAL COORDINATE
C                      SYSTEM FOR THE GENERIC BRACING
      DO 4444 K=1,NTOT
      WRITE(6,2000) K
 2000 FORMAT(1H1,1(/),2X,*BRACING NUMBER *,I2,/,2X,17(1H-))
C         THE ELEMENTS OF THE MATRIX KASTCON ARE INITIALIZED
      DO 2215 J=1,NNN
      DO 2215 I=1,NNN
 2215 KASTCON(I,J)=0.
      X=VX(K)
      Y=VY(K)
      SINOMEG=SIND(OMEGA(K))
      COSOMEG=COSD(OMEGA(K))
      WRITE(6,2222) X,Y,OMEGA(K)
 2222 FORMAT(2(/),5X,*X =*,F12.5,10X,*Y =*,F12.5,20X,*OMEGA =*,F12.5)
      CALL MATRO(N,SINOMEG,COSOMEG,X,Y,MATROT)
      CALL MOLT(MATROT,MATK,ALFAAST,NNN)
      KTAPE=ITAPE(K)
      REWIND KTAPE
      READ (KTAPE) ((KUCON(I,J),I=1,N),J=1,N),((KVCON(I,J),I=1,N),J=1,N)
     $,((KTETA(I,J),I=1,N),J=1,N)
      DO 2224 J=1,N
      DO 2223 I=1,N
      KASTCON(I,J)=KUCON(I,J)
      IN=I+N
      JN=J+N
      KASTCON(IN,JN)=KVCON(I,J)
      INN=I+NN
      JNN=J+NN
 2223 KASTCON(INN,JNN)=KTETA(I,J)
 2224 CONTINUE
      CALL MOLTIPL(KASTCON,ALFAAST,SAST,NNN)
      WRITE(6,3330) K
 3330 FORMAT(3(/),12X,*VECTOR OF THE FORCES AND MOMENTS IN THE LOCAL COO
     $RDINATE SYSTEM FOR THE BRACING NUMBER *,I2,/)
      DO 3335 I=1,N
      WRITE(6,3333) I,SAST(I)
 3333 FORMAT(/,20X,3HSU(,I2,3H) =,E12.5)
 3335 CONTINUE
      DO 3340 I=1,N
      J=I+N
      WRITE(6,3338) I,SAST(J)
```

```
 3338 FORMAT(/,20X,3HSV(,I2,3H) =,E12.5)
 3340 CONTINUE
      DO 3345 I=1,N
      J=I+NN
      WRITE(6,3343) I,SAST(J)
 3343 FORMAT(/,20X,3H M(,I2,3H) =,E12.5)
 3345 CONTINUE
 4444 CONTINUE
      GO TO 5000
C                    ERROR MESSAGES
 4460 WRITE(6,4462)
 4462 FORMAT(1H1,///,9X,*INPUT DATA ERROR*,9X,*N IS GREATER THAN 30*)
      GO TO 5000
 4465 WRITE(6,4467)
 4467 FORMAT(1H1,///,9X,*INPUT DATA ERROR*,9X,*NUMS = 0*,/,34X,*THE FRAM
     $ES ARE SIMULATED BY BRACINGS WITHOUT TORSIONAL STIFFNESS*,/,34X,*A
     $ND THEREFORE NUMS HAS TO BE DIFFERENT FROM 0*)
      GO TO 5000
 4480 WRITE(6,4482)
 4482 FORMAT(1H1,///,9X,*INPUT DATA ERROR*,9X,*NTOT (TOTAL NUMBER OF BRA
     $CINGS) IS GREATER THAN 20*)
 5000 CONTINUE
      STOP
      END

      SUBROUTINE TRIANG(A,N,NM)
      REAL A(90,91)
      N2=N-1
      DO 1 K=1,N2
      K1=K+1
      DO 2 I=K1,N
      C=A(I,K)/A(K,K)
      DO 3 J=K1,NM
    3 A(I,J)=A(I,J)-A(K,J)*C
    2 CONTINUE
    1 CONTINUE
      RETURN
      END

      SUBROUTINE SOST(A,N,NM)
      REAL A(90,91)
      N1=N+1
      N2=N-1
      DO 100 J=N1,NM
  100 A(N,J)=A(N,J)/A(N,N)
      IF(N.EQ.1) GO TO 600
      DO 200 K=1,N2
      I=N-K
      I1=I+1
      DO 300 J=I1,N
      DO 400 L=N1,NM
  400 A(I,L)=A(I,L)-A(I,J)*A(J,L)
  300 CONTINUE
      DO 500 L=N1,NM
  500 A(I,L)=A(I,L)/A(I,I)
  200 CONTINUE
  600 CONTINUE
      RETURN
      END

      SUBROUTINE SOTTR(KAA,KAB,N)
      REAL KAA(30,30),KAB(30,30)
      DO 1 I=1,N
      DO 1 J=1,N
    1 KAA(I,J)=KAA(I,J)-KAB(I,J)
      RETURN
      END

      SUBROUTINE ROTAT(SINOMEG,COSOMEG,X,Y,N,NN,MATK,KUCON,KVCON,KTETA)
      REAL MATK(90,91),KUCON(30,30),KVCON(30,30),KTETA(30,30)
      SINSIN=SINOMEG**2
      COSCOS=COSOMEG**2
      SINCOS=SINOMEG*COSOMEG
      DO 10 J=1,N
      DO 10 I=1,N
   10 MATK(I,J)=MATK(I,J)+COSCOS*KUCON(I,J)+SINSIN*KVCON(I,J)
      DO 30 J=1,N
      M=J+N
      DO 20 I=1,N
      MATK(I,M)=MATK(I,M)+SINCOS*(KUCON(I,J)+KVCON(I,J))
   20 MATK(M,I)=MATK(I,M)
   30 CONTINUE
      DO 110 J=1,N
      M=J+NN
      DO 100 I=1,N
      MATK(I,M)=MATK(I,M)+(SINCOS*X-COSCOS*Y)*KUCON(I,J)-(SINCOS*X+SINSI
     1N*Y)*KVCON(I,J)
  100 MATK(M,I)=MATK(I,M)
  110 CONTINUE
      DO 130 J=1,N
      M=J+N
      DO 120 I=1,N
      L=I+N
```

```
  120 MATK(L,M)=MATK(L,M)+SINSIN*KUCON(I,J)+COSCOS*KVCON(I,J)
  130 CONTINUE
      DO 160 J=1,N
      M=J+NN
      DO 150 I=1,N
      L=I+N
      MATK(L,M)=MATK(L,M)+(SINSIN*X-SINCOS*Y)*KUCON(I,J)+(COSCOS*X+SINCO
     1S*Y)*KVCON(I,J)
  150 MATK(M,L)=MATK(L,M)
  160 CONTINUE
      DO 180 J=1,N
      M=J+NN
      DO 170 I=1,N
      L=I+NN
      MATK(L,M)=MATK(L,M)+(X*SINOMEG-Y*COSOMEG)**2*KUCON(I,J)+(X*COSOMEG
     1+Y*SINOMEG)**2*KVCON(I,J)+KTETA(I,J)
  170 CONTINUE
  180 CONTINUE
      RETURN
      END

      SUBROUTINE SOSTIT(A,N,NM)
      REAL A(90,91)
      N1=N+1
      N2=N-1
      DO 100 J=N1,NM
  100 A(N,J)=A(N,J)/A(N,N)
      DO 200 K=1,N2
      I=N-K
      I1=I+1
      DO 300 J=I1,N
      DO 400 L=N1,NM
  400 A(I,L)=A(I,L)-A(I,J)*A(J,L)
  300 CONTINUE
      DO 500 L=N1,NM
  500 A(I,L)=A(I,L)/A(I,I)
  200 CONTINUE
      WRITE(6,700)
  700 FORMAT(6(/),10X,*VECTOR OF THE FLOOR DISPLACEMENTS IN THE GLOBAL C
     $OORDINATE SYSTEM*,/,10X,*(TRANSLATIONS OF THE GLOBAL COORDINATE SY
     $STEM ORIGIN AND FLOOR ROTATIONS)*,/)
      N3=N/3
      N32=N3*2
      DO 720 I=1,N3
      WRITE(6,710) I,A(I,NM)
  710 FORMAT(/,15X,*TRANSLATION IN X-DIRECTION FOR THE FLOOR NUMBER *,I2
     $,2H =,E12.5)
  720 CONTINUE
      DO 740 I=1,N3
      J=I+N3
      WRITE(6,730) I,A(J,NM)
  730 FORMAT(/,15X,*TRANSLATION IN Y-DIRECTION FOR THE FLOOR NUMBER *,I2
     $,2H =,E12.5)
  740 CONTINUE
      DO 760 I=1,N3
      J=I+N32
      WRITE(6,750) I,A(J,NM)
  750 FORMAT(/,15X,*ROTATION FOR THE FLOOR NUMBER *,I2,2H =,E12.5)
  760 CONTINUE
      RETURN
      END

      SUBROUTINE MOLTIP(A,KAB,V,N)
      REAL A(90,91),KAB(30,30),V(30)
      DO 3 I=1,N
      DO 1 J=1,N
      JN=J+N
C        AUXILIARY VECTOR
      V(J)=0.
      DO 1 K=1,N
    1 V(J)=V(J)+KAB(I,K)*A(K,JN)
      DO 2 IR=1,N
    2 KAB(I,IR)=V(IR)
    3 CONTINUE
      RETURN
      END

      SUBROUTINE MATRO(N,SINOMEG,COSOMEG,X,Y,MATROT)
      REAL MATROT(90,90)
      NNN=N*3
      DO 10 J=1,NNN
      DO 10 I=1,NNN
   10 MATROT(I,J)=0.
      NN=N*2
      DO 20 I=1,NN
   20 MATROT(I,I)=COSOMEG
      NN1=NN+1
      DO 30 I=NN1,NNN
   30 MATROT(I,I)=1.
      DO 40 I=1,N
      J=I+N
      MATROT(I,J)=SINOMEG
```

```
   40 MATROT(J,I)=-SINOMEG
      P=X*SINOMEG-Y*COSOMEG
      DO 50 I=1,N
      J=I+N*2
   50 MATROT(I,J)=P
      P=X*COSOMEG+Y*SINOMEG
      N1=N+1
      DO 60 I=N1,NN
      J=I+N
   60 MATROT(I,J)=P
      RETURN
      END

      SUBROUTINE MOLT(MATROT,MATK,ALFAAST,NNN)
      REAL MATROT(90,90),MATK(90,91),ALFAAST(90)
      NNNN=NNN+1
      DO 10 I=1,NNN
   10 ALFAAST(I)=0.
      DO 20 I=1,NNN
      DO 20 J=1,NNN
   20 ALFAAST(I)=ALFAAST(I)+MATROT(I,J)*MATK(J,NNNN)
      WRITE(6,30)
   30 FORMAT(3(/),12X,*VECTOR OF THE DISPLACEMENTS IN THE LOCAL COORDINA
     $TE SYSTEM*,/,12X,*(TRANSLATIONS OF THE LOCAL COORDINATE SYSTEM ORI
     $GIN AND ROTATIONS)*,/)
      NA=NNN/3
      NAA=NA*2
      DO 50 I=1,NA
      WRITE(6,40) I,ALFAAST(I)
   40 FORMAT(/,20X,*TRANSLATION IN U-DIRECTION FOR THE FLOOR NUMBER *,I2
     $,2H =,E12.5)
   50 CONTINUE
      DO 70 I=1,NA
      J=I+NA
      WRITE(6,60) I,ALFAAST(J)
   60 FORMAT(/,20X,*TRANSLATION IN V-DIRECTION FOR THE FLOOR NUMBER *,I2
     $,2H =,E12.5)
   70 CONTINUE
      DO 90 I=1,NA
      J=I+NAA
      WRITE(6,80) I,ALFAAST(J)
   80 FORMAT(/,20X,*ROTATION FOR THE FLOOR NUMBER *,I2,2H =,E12.5)
   90 CONTINUE
      RETURN
      END

      SUBROUTINE MOLTIPL(KASTCON,ALFAAST,SAST,NNN)
      REAL KASTCON(90,90),ALFAAST(90),SAST(90)
      DO 10 I=1,NNN
   10 SAST(I)=0.
      DO 20 I=1,NNN
      DO 20 J=1,NNN
   20 SAST(I)=SAST(I)+KASTCON(I,J)*ALFAAST(J)
      RETURN
      END
```

APPENDIX 3

Result printout

```
BRACING NUMBER  1
----------------

  X =   600.00000          Y =   150.00000                    OMEGA =      0.00000


        VECTOR OF THE DISPLACEMENTS IN THE LOCAL COORDINATE SYSTEM
        (TRANSLATIONS OF THE LOCAL COORDINATE SYSTEM ORIGIN AND ROTATIONS)

                TRANSLATION IN U-DIRECTION FOR THE FLOOR NUMBER  1 = -.79868E-02

                TRANSLATION IN U-DIRECTION FOR THE FLOOR NUMBER  2 = -.34165E-02

                TRANSLATION IN U-DIRECTION FOR THE FLOOR NUMBER  3 = -.63945E-03

                TRANSLATION IN V-DIRECTION FOR THE FLOOR NUMBER  1 = -.49449E-01

                TRANSLATION IN V-DIRECTION FOR THE FLOOR NUMBER  2 = -.26928E-01

                TRANSLATION IN V-DIRECTION FOR THE FLOOR NUMBER  3 = -.84832E-02

                ROTATION FOR THE FLOOR NUMBER  1 = -.51575E-04

                ROTATION FOR THE FLOOR NUMBER  2 = -.26698E-04

                ROTATION FOR THE FLOOR NUMBER  3 = -.75696E-05


        VECTOR OF THE FORCES AND MOMENTS IN THE LOCAL COORDINATE SYSTEM FOR THE BRACING NUMBER  1

                SU( 1) = -.48001E+04

                SU( 2) =  .37031E+04

                SU( 3) =  .54680E+04
```

```
SV( 1) = -.54343E+04
SV( 2) = -.10448E+05
SV( 3) = -.11501E+05
 M( 1) = -.38164E+07
 M( 2) =  .88193E+06
 M( 3) =  .17732E+07
```

BRACING NUMBER 2

```
X =   750.00000          Y =   900.00000                    OMEGA =  -135.00000

      VECTOR OF THE DISPLACEMENTS IN THE LOCAL COORDINATE SYSTEM
      (TRANSLATIONS OF THE LOCAL COORDINATE SYSTEM ORIGIN AND ROTATIONS)

            TRANSLATION IN U-DIRECTION FOR THE FLOOR NUMBER  1 =  .18024E-01
            TRANSLATION IN U-DIRECTION FOR THE FLOOR NUMBER  2 =  .10130E-01
            TRANSLATION IN U-DIRECTION FOR THE FLOOR NUMBER  3 =  .32392E-02
            TRANSLATION IN V-DIRECTION FOR THE FLOOR NUMBER  1 =  .61433E-01
            TRANSLATION IN V-DIRECTION FOR THE FLOOR NUMBER  2 =  .33616E-01
            TRANSLATION IN V-DIRECTION FOR THE FLOOR NUMBER  3 =  .10364E-01
            ROTATION FOR THE FLOOR NUMBER  1 = -.51575E-04
            ROTATION FOR THE FLOOR NUMBER  2 = -.26698E-04
            ROTATION FOR THE FLOOR NUMBER  3 = -.75696E-05

      VECTOR OF THE FORCES AND MOMENTS IN THE LOCAL COORDINATE SYSTEM FOR THE BRACING NUMBER  2

            SU( 1) =  .10325E+04
            SU( 2) =  .28896E+04
            SU( 3) =  .32942E+04
            SV( 1) =  .57566E+04
            SV( 2) =  .67565E+04
            SV( 3) =  .69490E+04
             M( 1) = -.15077E+05
             M( 2) =  .34842E+04
             M( 3) =  .70054E+04
```

BRACING NUMBER 3

```
X =     0.00000          Y =   450.00000                    OMEGA =     0.00000

      VECTOR OF THE DISPLACEMENTS IN THE LOCAL COORDINATE SYSTEM
      (TRANSLATIONS OF THE LOCAL COORDINATE SYSTEM ORIGIN AND ROTATIONS)

            TRANSLATION IN U-DIRECTION FOR THE FLOOR NUMBER  1 =  .74858E-02
            TRANSLATION IN U-DIRECTION FOR THE FLOOR NUMBER  2 =  .45930E-02
            TRANSLATION IN U-DIRECTION FOR THE FLOOR NUMBER  3 =  .16314E-02
            TRANSLATION IN V-DIRECTION FOR THE FLOOR NUMBER  1 = -.17503E-01
            TRANSLATION IN V-DIRECTION FOR THE FLOOR NUMBER  2 = -.10909E-01
            TRANSLATION IN V-DIRECTION FOR THE FLOOR NUMBER  3 = -.39415E-02
            ROTATION FOR THE FLOOR NUMBER  1 = -.51575E-04
            ROTATION FOR THE FLOOR NUMBER  2 = -.26698E-04
            ROTATION FOR THE FLOOR NUMBER  3 = -.75696E-05

      VECTOR OF THE FORCES AND MOMENTS IN THE LOCAL COORDINATE SYSTEM FOR THE BRACING NUMBER  3

            SU( 1) = 0.
            SU( 2) = 0.
            SU( 3) = 0.
            SV( 1) = -.69146E+02
            SV( 2) = -.42433E+02
            SV( 3) = -.53069E+02
             M( 1) = 0.
             M( 2) = 0.
             M( 3) = 0.
```

```
BRACING NUMBER  4
-----------------

  X =  1540.00000          Y =   450.00000                    OMEGA =   -30.00000

        VECTOR OF THE DISPLACEMENTS IN THE LOCAL COORDINATE SYSTEM
        (TRANSLATIONS OF THE LOCAL COORDINATE SYSTEM ORIGIN AND ROTATIONS)

                TRANSLATION IN U-DIRECTION FOR THE FLOOR NUMBER  1 =  .54948E-01

                TRANSLATION IN U-DIRECTION FOR THE FLOOR NUMBER  2 =  .29990E-01

                TRANSLATION IN U-DIRECTION FOR THE FLOOR NUMBER  3 =  .92122E-02

                TRANSLATION IN V-DIRECTION FOR THE FLOOR NUMBER  1 = -.80201E-01

                TRANSLATION IN V-DIRECTION FOR THE FLOOR NUMBER  2 = -.42758E-01

                TRANSLATION IN V-DIRECTION FOR THE FLOOR NUMBER  3 = -.12693E-01

                ROTATION FOR THE FLOOR NUMBER  1 = -.51575E-04

                ROTATION FOR THE FLOOR NUMBER  2 = -.26698E-04

                ROTATION FOR THE FLOOR NUMBER  3 = -.75696E-05

        VECTOR OF THE FORCES AND MOMENTS IN THE LOCAL COORDINATE SYSTEM FOR THE BRACING NUMBER  4

                SU( 1) = 0.

                SU( 2) = 0.

                SU( 3) = 0.

                SV( 1) = -.47003E+03

                SV( 2) =  .14075E+02

                SV( 3) =  .17932E+03

                 M( 1) = 0.

                 M( 2) = 0.

                 M( 3) = 0.


        CONDENSED STIFFNESS MATRIX (IN THE GLOBAL COORDINATE SYSTEM) FOR THE NTOT BRACINGS ( NTOT =  4 )

MATK( 1, 1)=  .62692E+07  MATK( 1, 2)= -.14189E+08  MATK( 1, 3)=  .10640E+08  MATK( 1, 4)=  .24239E+07  MATK( 1, 5)= -.55464E+07
MATK( 1, 6)=  .41637E+07  MATK( 1, 7)= -.27424E+10  MATK( 1, 8)=  .62762E+10  MATK( 1, 9)= -.47121E+10  MATK( 2, 1)= -.14189E+08
MATK( 2, 2)=  .39019E+08  MATK( 2, 3)= -.40792E+08  MATK( 2, 4)= -.55464E+07  MATK( 2, 5)=  .15254E+08  MATK( 2, 6)= -.15947E+08
MATK( 2, 7)=  .62762E+10  MATK( 2, 8)= -.17261E+11  MATK( 2, 9)=  .18046E+11  MATK( 3, 1)=  .10640E+08  MATK( 3, 2)= -.40792E+08
MATK( 3, 3)=  .70952E+08  MATK( 3, 4)=  .41637E+07  MATK( 3, 5)= -.15947E+08  MATK( 3, 6)=  .27720E+08  MATK( 3, 7)= -.47121E+10
MATK( 3, 8)=  .18046E+11  MATK( 3, 9)= -.31365E+11  MATK( 4, 1)=  .24239E+07  MATK( 4, 2)= -.55464E+07  MATK( 4, 3)=  .41637E+07
MATK( 4, 4)=  .62494E+07  MATK( 4, 5)= -.14258E+08  MATK( 4, 6)=  .10677E+08  MATK( 4, 7)=  .41117E+10  MATK( 4, 8)= -.93846E+10
MATK( 4, 9)=  .70299E+10  MATK( 5, 1)= -.55464E+07  MATK( 5, 2)=  .15254E+08  MATK( 5, 3)= -.15947E+08  MATK( 5, 4)= -.14258E+08
MATK( 5, 5)=  .39204E+08  MATK( 5, 6)= -.40982E+08  MATK( 5, 7)= -.93846E+10  MATK( 5, 8)=  .25805E+11  MATK( 5, 9)= -.26977E+11
MATK( 6, 1)=  .41637E+07  MATK( 6, 2)= -.15947E+08  MATK( 6, 3)=  .27720E+08  MATK( 6, 4)=  .10677E+08  MATK( 6, 5)= -.40982E+08
MATK( 6, 6)=  .71332E+08  MATK( 6, 7)=  .70299E+10  MATK( 6, 8)= -.26977E+11  MATK( 6, 9)=  .46950E+11  MATK( 7, 1)= -.27424E+10
MATK( 7, 2)=  .62762E+10  MATK( 7, 3)= -.47121E+10  MATK( 7, 4)=  .41117E+10  MATK( 7, 5)= -.93846E+10  MATK( 7, 6)=  .70299E+10
MATK( 7, 7)=  .49690E+13  MATK( 7, 8)= -.11142E+14  MATK( 7, 9)=  .82303E+13  MATK( 8, 1)=  .62762E+10  MATK( 8, 2)= -.17261E+11
MATK( 8, 3)=  .18046E+11  MATK( 8, 4)= -.93846E+10  MATK( 8, 5)=  .25805E+11  MATK( 8, 6)= -.26977E+11  MATK( 8, 7)= -.11142E+14
MATK( 8, 8)=  .30523E+14  MATK( 8, 9)= -.31741E+14  MATK( 9, 1)= -.47121E+10  MATK( 9, 2)=  .18046E+11  MATK( 9, 3)= -.31365E+11
MATK( 9, 4)=  .70299E+10  MATK( 9, 5)= -.26977E+11  MATK( 9, 6)=  .46950E+11  MATK( 9, 7)=  .82303E+13  MATK( 9, 8)= -.31741E+14
MATK( 9, 9)=  .55284E+14  MATK(

        VECTOR OF THE FLOOR DISPLACEMENTS IN THE GLOBAL COORDINATE SYSTEM
        (TRANSLATIONS OF THE GLOBAL COORDINATE SYSTEM ORIGIN AND FLOOR ROTATIONS)

            TRANSLATION IN X-DIRECTION FOR THE FLOOR NUMBER  1 = -.15723E-01

            TRANSLATION IN X-DIRECTION FOR THE FLOOR NUMBER  2 = -.74212E-02

            TRANSLATION IN X-DIRECTION FOR THE FLOOR NUMBER  3 = -.17749E-02

            TRANSLATION IN Y-DIRECTION FOR THE FLOOR NUMBER  1 = -.17503E-01

            TRANSLATION IN Y-DIRECTION FOR THE FLOOR NUMBER  2 = -.10909E-01

            TRANSLATION IN Y-DIRECTION FOR THE FLOOR NUMBER  3 = -.39415E-02

            ROTATION FOR THE FLOOR NUMBER  1 = -.51575E-04

            ROTATION FOR THE FLOOR NUMBER  2 = -.26698E-04

            ROTATION FOR THE FLOOR NUMBER  3 = -.75696E-05
```