Application of Fracture Mechanics to Concrete Structures

By Alberto Carpinteri[1]

Abstract: Material properties (heterogeneity and non-linearity) and disturbing phenomena (slow crack growth and microcracking) cause several research-workers to be pessimistic about the applicability of Fracture Mechanics to concrete structures. A critical review of the preceding works dealing with concrete fracture is presented. During the 1960's and 1970's it became more and more evident that notch sensitivity is not a material property but only a phenomenon dependent on the specimen and crack sizes, and that the degree of heterogeneity is only a matter of scale. A true fracture collapse can occur only with very large structures. On the other hand a real ultimate strength collapse can occur only with very small fracture specimens. Usually, with the sizes of the structures built by man and the lengths of the natural cracks, the two collapses are interacting.

Introduction

While the fracture testing of metallic materials already is in a phase of industrial utilization in nuclear and aeronautical engineering, the fracture testing of aggregative materials still is in a phase of study. The main reason for this advantage of the mechanical industry as compared with the civil one is the stimulus to a fracture project due to the close safety margin allowed in nuclear and aeronautical engineering. Namely, nuclear and aeronautical structures must utilize the lowest quantity of material, the first to avoid excessive neutron absorption, the latter to avoid excessive aircraft weight. On the other hand, many features of aggregative materials have discouraged the application of fracture mechanics to the project of plain concrete and reinforced concrete structures. The greatest difficulties in explaining the experimental results and in extrapolating them to the structural design of large structures are due to the *heterogeneity* and the *nonlinearity* of concrete. That is, Linear Elastic Fracture Mechanics is a theory valid only for macroscopically homogeneous and linear materials.

Moreover, there are two disturbing phenomena which occur during the fracture tests of cement materials and make research-workers pessimistic about the application of Fracture Mechanics to materials similar to rocks and concretes:

[1]Research Asst. Istituto di Scienza delle Costruzioni, Univ. of Bologna, 2 Viale Risorgimento, 40136 Bologna, Italy.

Note.—Discussion open until September 1, 1982. To extend the closing date one month, a written request must be filed with the Manager of Technical and Professional Publications, ASCE. Manuscript was submitted for review for possible publication on February 4, 1982. This paper is part of the Journal of the Structural Division, Proceedings of the American Society of Civil Engineers, ©ASCE, Vol. 108, No. ST4, April, 1982. ISSN 0044-8001/82/0004-0833/$01.00.

1. The *slow crack growth*, which reveals itself prior to the unstable crack propagation and makes the real crack length (at the moment of final collapse) unknown for the experimenter.

2. The *microcracking* at the crack tip, which is an energy absorption mechanism, as the plastic flow is for metallic materials.

It is likely that the steel reinforced concrete is a composite material sufficiently brittle to be studied by Fracture Mechanics.

But before facing such a difficult problem, where fracture collapse, ultimate strength collapse, and crushing of concrete and plastic flow collapse of steel are in competition, it is necessary to clarify the fracture behavior of plain concrete. At the same time it is important to observe that the degree of heterogeneity is only a matter of scale. For example, as PMMA (which is a material very suitable for fracture testing) must be considered a heterogeneous material from a microscopical viewpoint, so hydraulic concrete (with aggregates of 3–6 in. it is usually regarded as a completely notch-insensitive material) can be considered a homogeneous material for a dam. Therefore, we must suppose that hydraulic concrete, too, has a well-defined and constant fracture toughness, K_{IC}, even if its experimental determination is almost impossible.

As far as the nonlinear effects in concrete are concerned, we observe that softening effects are present in concrete tension tests, rather than hardening effects. Thus, it would be convenient to consider such effects in the vicinity of the crack tip, while the remaining part of the concrete structure, if this is sufficiently large, behaves in a perfectly linear manner. In the writer's opinion, the slow crack growth effects are to be considered only in this sense, i.e., as a partial stress relaxation at the crack tip, rather than as a real propagation of the material discontinuity (complete stress relaxation) prior to the final collapse.

However, it is clear that the microcracking at the crack tip is to be correlated to the ultimate strength collapse, rather than to the fracture collapse. In fact, when the damaged process zone at the front of the crack is very large compared with the ligament size, then the structural crisis is due to the overcoming of the ultimate strength, σ_u, rather than to the overcoming of the fracture toughness K_{IC}.

Fracture Toughness Parameters

The statical parameter, K_I, (*stress-intensity factor*) was introduced by Irwin in 1957 (29). It was defined as the amplification factor of the stress field developing at the crack tip ($r << b$) and, due to the symmetrical loads (Fig. 1)

$$\sigma_r = \frac{K_I}{\sqrt{2\pi r}} \cos\frac{\vartheta}{2}\left(1 + \sin^2\frac{\vartheta}{2}\right); \quad \sigma_\vartheta = \frac{K_I}{\sqrt{2\pi r}} \cos^3\frac{\vartheta}{2};$$

$$\tau_{r\vartheta} = \frac{K_I}{\sqrt{2\pi r}} \frac{1}{2} \cos\frac{\vartheta}{2} \sin\vartheta \quad \ldots \quad (1)$$

While the functions of ϑ and the singularity, $r^{-1/2}$, concern the elastic Irwin's model (29), the stress-intensity factor, K_I, depends on the geometry of the structure and crack and on the geometry and magnitude of the external loadings.

The factor K_I derives from a linear elastic analysis; therefore, the experimental

determination of its critical value, K_{IC}, is valid only when the crack tip process zone is small in relation to the specimen and crack sizes (*condition of small scale yielding*). From Eq. 1 it is evident how the stress-intensity factor, K_I, has the physical dimensions $FL^{-3/2}$. In the case of a *three point bending test* (Fig. 1), K_I can be expressed as a function of the acting force, P, the beam span, l, the cross-section sizes (thickness, t, and width, b) and the ratio, a/b, between the crack depth, a, and the specimen width, b. According to *ASTM E 399-74* (47)

$$K_I = \frac{Pl}{tb^{3/2}} f\left(\frac{a}{b}\right) \quad \text{with:} \quad f\left(\frac{a}{b}\right) = 2.9\left(\frac{a}{b}\right)^{1/2} - 4.6\left(\frac{a}{b}\right)^{3/2}$$

$$+ 21.8\left(\frac{a}{b}\right)^{5/2} - 37.6\left(\frac{a}{b}\right)^{7/2} + 38.7\left(\frac{a}{b}\right)^{9/2} \qquad 0.45 \le \frac{a}{b} \le 0.55 \quad \ldots\ldots (2)$$

If the cracked specimen features and its fracture load are known, it is possible to obtain the critical value, K_{IC}, of the material. For the K_{IC} determination, the stiffness of the cracked system or the critical specimen deflection are not required; thus, K_{IC} can be considered as a static parameter.

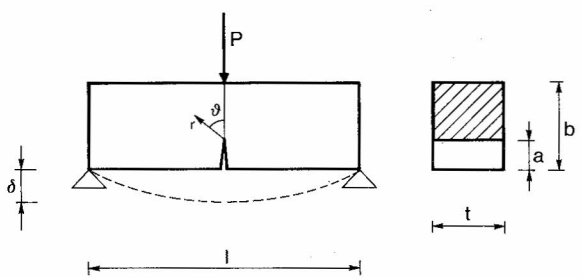

FIG. 1.—Three Point Bending Test

Also, the energetic parameter, $\mathcal{G}_{IC}$ (*crack extension force*) was defined by Irwin (29) in order to extend the concept of surface energy to those materials showing dissipative phenomena at the crack tip. The surface energy had been defined by Griffith (20) as the thermodynamic energy necessary to produce a unit free surface. Analogously, the generalized crack extension force, $\mathcal{G}_{IC}$, was defined by Irwin as the absorbed energy in a unit crack extension. Then it is possible to define parameter $\mathcal{G}_I$ as the elastic energy release in a unit virtual crack extension. When $\mathcal{G}_I$ is equal to or greater than $\mathcal{G}_{IC}$, it means that the released energy is sufficient to produce the new fracture surface, and so the crack propagation can really occur.

The total potential energy of an elastic body is (Fig. 2).

$$V = \int_0^P P\,d\delta - P\delta \quad \ldots\ldots\ldots\ldots\ldots\ldots\ldots\ldots (3)$$

When the body is linear elastic (Fig. 2*b*), an application of Clapeyron's Theorem gives

$$V = \frac{1}{2} P\delta - P\delta = -\frac{1}{2} P\delta \quad \ldots \quad (4)$$

If an elementary crack extension, da, occurs with the force, P = constant, the total potential energy decreases:

$$\frac{dV}{da} = -\frac{1}{2} P \frac{d\delta}{da} = -\frac{1}{2} P^2 \frac{dC}{da} \quad \ldots \quad (5)$$

in which C = the body compliance, $C = \delta/P$, relating to the crack of length a.

Eq. 5 is just the elastic energy placed by the system at the crack propagation's disposal:

$$\mathscr{G}_I = -\frac{1}{2} \frac{P^2}{t} \frac{dC}{da} \quad \ldots \quad (6)$$

When real extensions are considered, Eq. 6 provides an experimental method, named *Direct Method* by Kaplan (30), which allows $\mathscr{G}_{IC}$ to be obtained. Also,

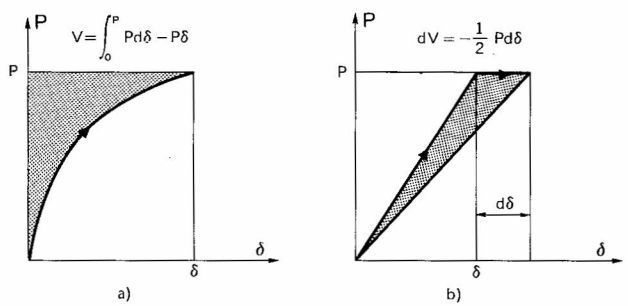

FIG. 2.—Total Potential Energy of Elastic Body

the crack extension force, $\mathscr{G}_{IC}$, obtained by the Direct Method, is strictly definable only in the *linear elastic* field, as is the stress-intensity factor, K_{IC}. $\mathscr{G}_{IC}$ has the physical dimensions FL^{-1}.

The energetic parameter, J_{IC}, (J-integral) was defined by Rice (38,39) in 1968, in order to study the fracture of nonlinear materials, i.e., with very large plastic or microcracked zones. With reference to a plane elastic body (Fig. 3), at first the J-integral was defined as the following line-integral:

$$J_I = \int_\Gamma W\,dy - \mathbf{t} \cdot \frac{\partial \mathbf{u}}{\partial x}\,ds \quad \ldots \quad (7)$$

in which Γ = an arbitrary curve surrounding the crack tip; W = the elastic strain energy density; t = the stress vector acting on Γ; and $\mathbf{u}$ = the displacement vector on Γ. Rice (39) showed how, in the *elastic* field (*linear or not*), J_I is the rate of decrease of total potential energy with respect to crack length in a unit thickness plate:

$$J_I = -\frac{dV}{da} \quad (8)$$

When such energy is really sufficient to produce the new fracture surface, then the real crack extension can occur:

$$J_I = J_{IC} \quad (9)$$

in which J_{IC} is coincident with $\mathscr{G}_{IC}$ in the case of linear material.

The integral J_I can be defined again for an elastic-plastic material following the Total Deformation Theory; namely, in this case, the plastic material is equivalent to a nonlinear elastic material. Then the energy density, W, being definable, makes it possible to propose again the integral definition Eq. 7. In showing again the J_I energetic meaning, some difficulties arise due to the unloading on the growing fracture surface, i.e., in a surely yielded zone.

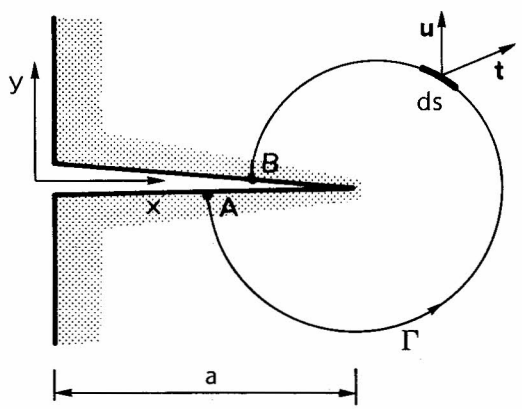

FIG. 3.—Arbitrary Curve, Γ, Surrounding Crack Tip

In the plastic field, J_I then has an energetic meaning only if the original situation and the incremental one of extended crack are referring to two different bodies loaded in a monotonic way. That is, it is possible to avoid unloadings in the plastic zone, only simulating the real crack extension by a virtual one. Such a simulation has been transferred from the theoretical field to the experimental by Begley and Landes (5) in 1972; they applied their method to high strength steel alloys. In the *linear elastic* field it is possible to show that the previously examined fracture parameters are connected by the following relationships (plane stress condition):

$$J_{IC} = \mathscr{G}_{IC} = \frac{K_{IC}^2}{E} \quad (10)$$

That is, for an ideal linear elastic material, the energetic parameters, J_{IC} and $\mathscr{G}_{IC}$, are coincident and equal to the square of K_{IC} divided by the material Young's modulus, E (29).

1960s: First Experimental Studies

The first research applying Fracture Mechanics to concretes and referring to Griffith's Theory is by Kaplan (30). Kaplan performed three and four point bending tests and determined the crack extension force, $\mathscr{G}_{IC}$. The doubts and problems of today were already present in that pioneer work. For instance, Kaplan, who performed his testing with specimens of different sizes, observed in wonder that $\mathscr{G}_{IC}$ varied strongly with the specimen size. Missing nonlinear plastic effects, Kaplan charged this variability to the *slow crack growth*, which reveals itself prior to the unstable crack propagation. Another problem which Kaplan faced was the relation between the static and the energetic fracture parameters. He practically resolved it by assuming the stiffness parameter E^*, connecting them, as the Young's modulus, E, of the undamaged material. The papers by Romualdi and Batson (40) and by Glucklich (19) followed this first fundamental work in 1963.

Romualdi and Batson (40) suggested a Fracture Mechanics application to reinforced concretes and examined the crack arrest phenomenon at the interface between concrete and steel. Then they performed a series of tension tests with cracks of different length and observed that $\mathscr{G}_{IC}$ increased by increasing the crack length. Romualdi and Batson came to the conclusion that $\mathscr{G}_{IC}$ probably is an increasing function of the crack length, giving up considering $\mathscr{G}_{IC}$ as a material constant. Then, Glucklich (19) was the first to study the dissipative effects occurring in concrete at a crack tip, and charged them to microcracking and not to plastic flow. In his work, Glucklich considered the concrete heterogeneity and qualitatively analyzed the elementary phenomena giving rise first to the material degradation and then to the fracture of these composite materials.

In 1969, Naus and Lott (35) published the results of an extensive research on Portland concretes, intending to obtain the fracture toughness K_{IC}, varying material features, as the water/cement ratio, the air content, the fine aggregate content, the curing time, and the maximum size of coarse aggregate. A regular variation of K_{IC} was obtained, varying the previously mentioned features. A paper by Welch and Haisman (53) came out in 1969, as well as in the paper by Kaplan (30), the writers explained the K_{IC} and $\mathscr{G}_{IC}$ variability by the slow crack growth and underlined the importance of defining a Young's modulus connecting the static with the energetic parameter. Unlike Romualdi and other later writers, they claimed the role of "material constant" for K_{IC} and $\mathscr{G}_{IC}$, and especially asserted their independence of the ultimate strength, σ_u.

In the same year, Moavenzadeh and Kuguel (33) performed three point bending tests on cement pastes, mortars, and concretes of different composition, with specimens perhaps too small to provide reliable parameters $1 \times 1 \times 10$ in., ($25.4 \times 25.4 \times 254$ mm). However, they determined fracture toughnesses decidedly higher for concretes than for mortars and pastes, and explained it observing that the aggregate performs two positive functions: it increases the microcracking and then scatters the available energy in many small streams (microcracks) rather than conveying it in a single big flow (macrocrack); it directly arrests the macrocrack run by an higher $\mathscr{G}_{IC}$.

Desayi (16) performed fracture tests on mortar and concrete prisms in compression with an inclined crack. It is, however, difficult to connect Desayi's results with the results by other writers because the compression fracture

mechanism for skew cracks is rather different from the traction fracture mechanism for cracks orthogonal to the force. In the first case, there are namely sliding and friction effects (Mode II).

1970s: Notch Sensitivity and Size Effects

In 1971, Shah and McGarry (44) faced the *notch sensitivity* problem and, after considering experimental results also by other authors, came to the conclusion that mortar and concrete are notch insensitive when the crack has a length lower than a few centimeters. They asserted that the critical length depends on the aggregate size, and did not underline the fact that it especially depends on the cracked body sizes. In the following year, Brown (6) performed a bending test series and a double cantilever beam test series on cement paste and mortar. While cement paste appeared notch sensitive, i.e. K_{IC} was independent of the different and increasing depths of the crack, mortar appeared notch insensitive and showed discordant results, varying the test typology and the crack depth. Brown considered the K_{IC} variability surprising and compared the results of the two test series, the crack length being equal instead of the relative crack length. He neglected the fact that the specimen width was much larger in the double cantilever beam than in the bending beam.

In a later paper, Brown (7) assessed the resistance to crack propagation in glass-fiber-reinforced cement paste. He found that the "pseudo-toughness" of this material increased linearly with crack growth at a rate proportional to the fiber content. Such an increase was rapid and almost linear between 4 and 10 mm crack growth. Above 10 mm, the rate of increase seemed to slacken, and some of the results for individual specimens even showed an ill-defined plateau. Brown and Pomeroy (8), after experimental research on mortars and concretes, came to the conclusion that the addition of aggregate not only increases the toughness, but also results in a progressive increase in toughness with crack growth: the higher the proportion of aggregate the larger the increase in toughness. In 1974, Naus, Batson, and Lott (34) presented a review of the preceding works on concrete fracture testing at a conference on ceramics fracture, and reported the K_{IC} values obtained by several authors.

The dependence of the notch sensitivity on the specimen sizes was explicitly pointed out in three fundamental papers of 1976 (50,24,41). Walsh (50) asserted that, only if the specimen is large enough, the zone of stress disturbance can be considered to be surrounded by an area in which the stresses are substantially in accordance with the ideal stress distribution of Linear Elastic Fracture Mechanics (LEFM). Walsh was the first who doubted the "slow crack growth," proposed by several authors as a cause of the K_{IC} variability. He charged the incoherences of the results, reported in literature, to the fact that the specimens used were too small (51). Walsh considered also the problem of crack initiation at corners of openings in walls, applying the Fracture Mechanics concepts.

Higgins and Bailey (24) performed fracture tests for a cement paste and obtained increasing K_{IC} values, increasing the specimen sizes. They deduced that LEFM is not applicable to hardened cement paste samples of the size used in their study, because the zone of stress perturbation round the crack tip is not small compared with the specimen and crack sizes. In the same year, Schmidt (41) measured the fracture toughness, K_{IC}, of a calcareous rock (Indiana limestone)

by three point bending tests and obtained a factor K_{IC} increasing with the crack length and the specimen width, up to a maximum value. Such value was considered a limit by Schmidt and, more precisely, the real K_{IC} relating to the plane strain condition. However, it is worth noting that, for the aggregative materials, it is probably artful to distinguish between "plane strain" and "plane stress fracture toughness," the Poisson ratio, ν, being very low.

Evans, Clifton, and Anderson (17) performed Fracture Mechanics studies on plain and polymer impregnated mortars and showed that the fracture mechanics parameters are independent of the crack length for cracks larger than ~2 cm. Acoustic emission measurements indicated that the susceptibility to microcracking is substantially retarded by polymer impregnation.

Mindess and Nadeau (32) carried out tests on mortar and concrete to verify whether the fracture toughness depends on the length of the crack front, i.e., on the specimen thickness. Within the thickness range studied, there was no dependence, owing to the fact that concrete is a truly brittle material and the size of the plastic zone is negligible.

In 1977, Bear and Barr (4) summarized two preceding papers of theirs (1,2), where two fracture tests are suggested to be performed with samples, cored from concrete beams by a radial drill. In the bending test (1), they obtained K_{IC} values increasing with the notch depth, while in the eccentric compression test (2), they obtained K_{IC} values decreasing with the notch depth. In the eccentric compression tests on circumferentially notched bars the authors observed that, if a shallow notch is used, shear failure occurs prior to crack propagation at the notch.

In the same year, Henry and Paquet published three papers (21,22,23), in which the results of calcite rocks fracture experiments are reported. They noticed the fracture toughness variability with porosity and temperature. Moreover, they pointed out how the rock anisotropy influences the fracture strength, and how some planes favor the fracture propagation more than others. In addition to the usual bending fracture tests, the authors proposed a particular Brazilian Test with a cracked disk (23).

Hillemeier and Hilsdorf (25) have experimentally determined the fracture toughness of the single concrete compounds, i.e. of cement paste, aggregate, and interface paste-aggregate. Their intention to connect the partial fracture toughnesses with the global concrete ductility appears extremely interesting. The eccentric traction for the compact test was produced by a wedge, changing compression into traction loading. In contrast to direct loading, wedge loading allows controlled crack growth. For cement paste, the authors obtained K_{IC} values decreasing with the crack depth.

Gjørv, Sørensen, and Arnesen (18) observed the decrease of notch sensitivity with the increase in crack depth, and considered this phenomenon to be very peculiar. In their opinion, it may be due to the particular testing procedure and support conditions and thus it may not reflect the true behavior of the material. Then, Cook and Crookham (15) performed four point bending tests on impregnated polymer concretes. For notch depth ratios greater than approximately 0.35, K_{IC} values were decreasing for increasing crack lengths. As in the preceding case of notch sensitivity decrease for large cracks (18), this phenomenon is perfectly explicable: with too short or too long cracks, the ultimate strength collapse comes before the fracture collapse (9). Swartz, et al. (49)

considered the method of compliance measurement as a suitable and convenient technique for monitoring crack growth in plain concrete beams subjected to repeated loads. But they felt the fracture toughness, as normally used, is not a pertinent material property.

Among the most recent publications dealing with concrete fracture testing, we should recall the paper by Strange and Bryant (48) where bending and tension test results for concretes, mortars, and pastes are reported. Once more, fracture toughness has not appeared constant, varying in specimen and crack sizes; sufficiently stable values only have been obtained for long cracks. The authors came to the conclusion that these phenomena indicate that concrete cannot be regarded as an ideal elastic homogeneous material: a region of nonelastic behavior must exist at the crack tip and, for the crack lengths used, must invalidate linear elastic stress analyses. Strange and Bryant observed how the slow crack growth, which could partially explain the K_{IC} variability, has not at all revealed itself in bending tests. In the same year, Sok and Baron (46) observed that the energy necessary for fracture increases as the crack propagates. This situation is characterized by an R-curve, which can be regarded as a fracture resistance property.

In 1980, Ziegeldorf, Müller, and Hilsdorf (55) showed that notch sensitivity is a necessary but not a sufficient condition for the applicability of Linear Elastic Fracture Mechanics. They presented a model law, which explains the increase of the net failure stress of notched specimens with increasing notch depth, after passing through a minimum (18). In a later paper, the preceding authors (56) present a theoretical and experimental analysis of crack formation in concretes. These investigations indicate that cracks due to internal desiccation exist in concrete and are formed at aggregates only with a diameter larger than a critical value.

In the same year, Carpinteri studied the notch sensitivity effects on fracture testing of brittle and ductile (9) materials, the specimen and crack sizes varying due to Dimensional Analysis. Such effects are due to the coexistence of two different structural crises, induced by generalized forces with different physical dimensions ($\sigma = Fl^{-2}$, $K_I = FL^{-3/2}$), and the finiteness of specimen sizes. The application of Buckingham's Theorem for physical similitude and scale modeling allows the definition of a nondimensional parameter, s (the test brittleness number), which governs the notch sensitivity phenomenon.

Some recurring experimental inconsistencies are thus explained, such as: (1) The increase or decrease of fracture toughness, K_{IC}, by increasing the crack length; (2) the increase of K_{IC} by increasing the specimen sizes; and (3) the variability of K_{IC} by varying the test geometry. Let q_0 be the failure load for ultimate strength over-coming, or for crack propagation, or both, in a cracked structure. In the simplest case of homogeneous, isotropic, and linear elastic material it is possible to show

$$\frac{q_0}{\sigma_u^{\alpha} b^{\beta}} = \phi_1\left(s, \frac{a}{b}\right)\phi_2\left(\frac{t}{b}, \frac{1}{b}\right), \qquad (11)$$

in which ϕ_1 = a function of the brittleness number:

$$s = \frac{K_{IC}}{\sigma_u b^{1/2}} \qquad (12)$$

and of the relative crack depth, a/b (Fig. 1).

The actual function, ϕ_I, depends on the material stress-strain laws and could be exactly determined only by experience. However, an upper bound to ϕ_I can be utilized, for example in the case of the three point bending test. The nondimensional fracture load against the relative crack length, varying the brittleness number, s, is reported in Fig. 4, together with the ultimate strength load. It is evident how the fracture tests completely lose their meaning for $s \gtrsim 0.50$. For $s \lesssim 0.50$, the fracture tests are significant only with cracks of intermediate length. Similar inconsistencies in the mixed mode crack problem (opening + sliding) can be explained regarding the ultimate strength collapse as an independent crisis (10) and considering the effects of the stress collinear to the crack-line on the crack branching phenomenon (11).

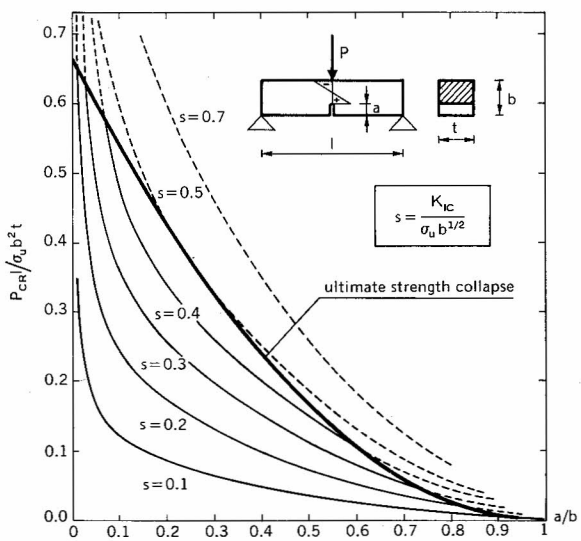

FIG. 4.—Interaction between Fracture Collapse and Ultimate Strength Collapse (12)

The object of a further experimental investigation by Carpinteri (12,13) was to determine the fracture toughness parameters, K_{IC}, $\mathscr{G}_{IC}$, and J_{IC} for a Carrara marble, a mortar and two concretes with different maximum aggregate size. Values of the J-integral were calculated following the procedure suggested by Begley and Landes for steel alloys (5). The three point bending test was chosen as test geometry. The critical values, K_{IC}, of the stress-intensity factor have been obtained applying, for each single test, Eq. 2. Such values then have been averaged for each material and for each crack depth, and are represented in Fig. 5.

Observing Fig. 5, the suspicion may arise that the deviations, more than by true statistical fluctuations, are caused by systematic errors. The factor K_{IC}, as a function of the relative crack depth, shows very similar and clear trends for marble and concretes: its values are increasing for low depths, a/b and decreasing for higher depths. The tops of these diagrams are for $a/b = 0.25$–0.30.

The bell-shaped diagrams of K_{IC}, obtained for marble and concretes, reveal that the crisis has prevailingly occurred for ultimate strength overcoming. That is, the top of these diagrams corresponds to the value a/b, for which the fracture curve, $s = 0.50$, is tangent to the ultimate strength curve (Fig. 4). In the case of mortar, the low statistical fluctuations of K_{IC} and the lack of a bell-shaped variation show that the crisis occurred for crack propagation.

1980s: Plain and Reinforced Concrete Structures

It is now clear that a true fracture collapse can occur only with very large structures. On the other hand, a true ultimate strength collapse can occur only with very small fracture specimens. Usually, with the sizes of the structures built by man and the lengths of the natural cracks, for example due to thermal

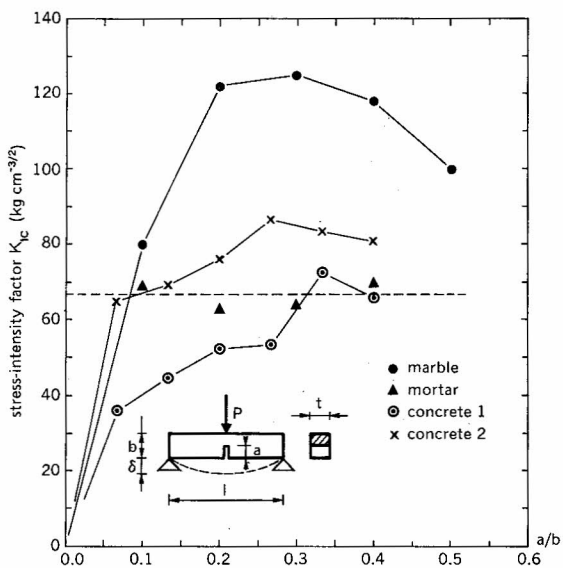

FIG. 5.—Fracture Toughness as Function of Relative Crack Depth (12)

stresses or shrinkage, the two collapses are interacting. In fact, by decreasing the structure sizes, fracture collapse becomes ultimate strength collapse, passing through *mixed collapses*. "Mixed collapse" means that the crisis mechanism is the overcoming of the ultimate strength rather than the crack propagation, but the structure is sufficiently large to feel stress concentration effects. A "weak" solution for the fracture-sensitivity problem has been shown in Ref. 9. That is, instead of the real "mixed collapse" load, an upper bound of it has been obtained, considering the two types of collapse as not interacting. A further step forward could be taken by the determination of the real "mixed collapse" load and then of the material behavior in the transition zone "ductile-brittle," increasing the cracked body sizes.

Recently, Sih (45) has been conducting research on the fracture size effects. He writes:

> "The philosophy adopted in material testing is that laboratory data collected on the smaller test specimens could be translated for use in the design of large size structures. Such an approach, however, can be deficient. A small metal specimen may exhibit fictitiously high ductility while the same material in a larger size can behave in a brittle fashion. Clear evidence of this has been observed in the failures of large storage tanks and ships under service conditions. Post-mortem examination of the broken pieces of the tanks and the fractured surfaces of ship plates did not disclose any ductile fracture surface appearance or zones of permanent deformation such as one actually sees on the much smaller laboratory specimens of low carbon steels tested at the same service temperature."

In his very interesting interdisciplinary paper, Sih asserts that the separation of solids and fluids can be studied by the same criterion of instability. On the other hand, as in hydraulics, a fluid flow and its turbulent phenomena can be reproduced by a scale model, only if the Reynolds number, $N = (Dv/\mu)$ is higher than a critical value, so in solids mechanics, the mechanical behavior of a structure and its fracture collapse can be reproduced by a scale model, only if the brittleness number, $s = K_{IC}/(b^{1/2}\ \sigma_u)$ is sufficiently low (9). It is interesting to observe that viscosity, μ (fluid), and fracture toughness, K_{IC} (solid), play the same role in the physical similitude description of the continua separation.

Probably the analytical determination of the "mixed collapse" load is impossible. However, such determination could be obtained by experience, averaging the results of a number of tests performed on concretes with different properties, σ_u and K_{IC}, and different specimen size, and by numerical investigation on appropriate models. A crack model, which can well simulate the mixed collapse phenomenon, is the Hillerborg model (26,27). It is similar to the Barenblatt and Dugdale model. The crack is assumed to propagate when the stress at the crack tip reaches the tensile strength, σ_u. When the crack opens, the stress is not assumed to fall to zero at once, but to decrease with increasing crack width.

Petersson (36,37) has recently applied such a model to study some practical problems by the Finite Element Method, as the size effects in fracture toughness testing, the influence of beam depth on the flexural tensile strength, and the shear fracture of reinforced concrete. Shah (43) pointed out that for the design of concrete structures it is not necessary to consider fracture mechanics analysis, since the tensile strength of concrete is generally ignored. However, the fracture mechanics approach will be useful in the future to exploit to the utmost the concrete ductility.

Recently, Bažant and Cedolin (3) analyzed the propagation of an element-wide blunt crack band in a finite element mesh. The application of the strength criterion to stresses in the element just ahead was not found to be objective; the results strongly depend on element size. A fracture energy criterion was then formulated (3) and it was shown that the results coincide for greatly different element sizes. Fracture Mechanics may be extremely useful for the study of the collapse

of reinforced concrete beams, i.e. the concurrent phenomena of concrete fracture and steel yielding, and the variations in the system compliance. Carpinteri (14) is conducting research on an analytical model which reduces such a complex phenomenon to a stiff-linear hardening behavior. Ingraffea (28) studied the same subject by the Finite Element Method.

Although Fracture Mechanics is applicable to middle-sized structures too (e.g. plain and reinforced concrete beams), for very large aggregative structures like dams and rocky systems, it is a very suitable method of design and test (31,54). However, it would be necessary to develop extrapolation techniques, based on the Physical Similitude concepts, able to determine the real fracture toughness of relatively fracture-insensitive materials (hydraulic concretes).

In the last few years, experimental investigations have been carried out (42,52), in order to define the "mixed collapse" in terms of the J_{IC} integral. However, in this case too, there is some dependence of the results on specimen and crack sizes. Thus, it seems possible to conclude that J_{IC}, as well as K_{IC}, can be considered only an empirical parameter in many experimental cases, rather than a constant property of the material. In fact, all the "fictitious" fracture parameters (K_{IC}, $\mathscr{G}_{IC}$, J_{IC}, COD) relate not to a more energy-absorbing fracture phenomenon, but to a collapse mechanism different from Fracture!

Conclusions

1. Heterogeneity is only a matter of scale.
2. Softening effects are present in concrete, rather than hardening effects.
3. Slow crack growth is to be regarded as a partial stress relaxation at the crack tip, due to softening, rather than a real crack propagation.
4. Microcracking at the crack tip is to be correlated to the ultimate strength collapse, rather than to the fracture collapse.
5. Notch sensitivity is a necessary but not sufficient condition for the applicability of LEFM.
6. The size effects in fracture testing are due to the coexistence of two different structural crises induced by generalized forces with different physical dimensions, and to the finiteness of specimen sizes.
7. Usually, with the sizes of the structures built by man and the lengths of the natural cracks, the fracture collapse and the ultimate strength collapse are interacting. By decreasing the structure sizes, fracture collapse becomes ultimate strength collapse, passing through "mixed collapses."
8. Viscosity (fluid) and fracture toughness (solid) play the same role in the physical similitude description of the continua separation.
9. It is necessary to develop extrapolation methods, based on physical similitude concepts, able to determine the real fracture toughness of relatively fracture-insensitive materials (e.g. hydraulic concretes).
10. The "fictitious" fracture parameters, J_{IC} included, can be considered empirical quantities only, rather than material properties.

Appendix I.—References

1. Barr, B., and Bear, T., "A Simple Test of Fracture Toughness," *Concrete*, Apr., 1976, pp. 25–27.

2. Barr, B., and Bear, T., "Fracture Toughness," *Concrete*, Apr., 1977, pp. 30–32.
3. Bazant, Z. P., and Cedolin, L., "Blunt Crack Band Propagation in Finite Element Analysis," *Journal of the Engineering Mechanics Division*, ASCE, Vol. 105, No. EM2, Apr., 1979, pp. 297–315.
4. Bear, T. J., and Barr, B., "Fracture Toughness Tests for Concrete," *International Journal of Fracture*, Vol. 13, 1977, pp. 92–96.
5. Begley, J. A., and Landes, J. D., "The *J*-Integral as a Fracture Criterion," *ASTM STP*, Vol. 514, 1972, pp. 1–23.
6. Brown, J. H., "Measuring the Fracture Toughness of Cement Paste and Mortar," *Magazine of Concrete Research*, Vol. 24, No. 81, 1972, pp. 185–196.
7. Brown, J. H., "The Failure of Glass-Fibre-Reinforced Notched Beams in Flexure," *Magazine of Concrete Research*, Vol. 25, No. 82, Mar., 1973, pp. 31–38.
8. Brown, J. H., and Pomeroy, C. D., "Fracture Toughness of Cement Paste and Mortars," *Cement and Concrete Research*, Vol. 3, 1973, pp. 475–480.
9. Carpinteri, A., "Size Effect in Fracture Toughness Testing: A Dimensional Analysis Approach," *Proceedings of the International Conference on Analytical and Experimental Fracture Mechanics*, Ed. G. C. Sih, Roma, Italy, 1980.
10. Carpinteri, A., and Di Tommaso, A., "Some Notes on the Mixed Mode Crack Problem," *Proceedings of the International Symposium on "Absorbed Specific Energy and/or Strain Energy Density Criterion,"* Ed. G. C. Sih, Budapest, Hungary, 1980.
11. Carpinteri, A., Di Tommaso, A. Viola, E., "Collinear Stress Effect on the Crack Branching Phenomenon," *Materials and Structures (RILEM)*, Vol. 12, No. 72, 1979, pp. 439–446.
12. Carpinteri, A., "Static and Energetic Fracture Parameters for Rocks and Concretes," *Materials and Structures (RILEM)*, Vol. 14, No. 81, 1981, pp. 151–162.
13. Carpinteri, A., "Experimental Determination of Fracture Toughness Parameters, K_{IC} and J_{IC} for Aggregative Materials," *Proceedings of the 5th International Conference on Fracture*, Cannes, France, 1981.
14. Carpinteri, A., "A Fracture Mechanics Model for Reinforced Concrete Collapse," *Proceedings*, IABSE-Colloquium on Advanced Mechanics of Reinforced Concrete, Delft, The Netherlands, 1981.
15. Cook, D. J., and Crookham, G. D., "Fracture Toughness Measurements of Polymer Concrete," *Magazine of Concrete Research*, Vol. 30, No. 105, Dec., 1978, pp. 205–214.
16. Desayi, P., "Fracture of Concrete in Compression," *Materials and Structures (RILEM)*, Vol. 10, No. 57, 1969, pp. 139–144.
17. Evans, A. G., Clifton, J. R., and Anderson, E., "The Fracture Mechanics of Mortars," *Cement and Concrete Research*, Vol. 6, 1976, pp. 535–548.
18. Gjørv, O. E., Sørensen, S. I., and Arnesen, A., "Notch Sensitivity and Fracture Toughness of Concrete," *Cement and Concrete Research*, Vol. 7, 1977, pp. 333–344.
19. Glucklich, J., "Fracture of Plain Concrete," *Journal of the Engineering Mechanics Division*, ASCE, Dec., 1963, pp. 127–136.
20. Griffith, A. A., "The Phenomenon of Rupture and Flow in Solids," *Proceedings of the First International Congress Applied Mechanics*, 1924.
21. Henry, J. P., Paquet, J., "La Tenacité des Roches Calcaires: Influence des Parametres Microstructuraux et de l'Environnement," *Mechanics Research Communications*, Vol. 4, No. 3, 1977, pp. 193–198.
22. Henry, J. P., Paquet, J., Tancrez, J. P., "Experimental Study of Crack Propagation in Calcite Rocks," *International Journal of Rock Mechanics Mining Science of Geomechanics*, Vol. 14, 1977, pp. 85–91.
23. Henry, J. P., Paquet, P., "Résistance des Matériaux," *C. R. Acad. Sc.*, Paris, t. 284, 1977, pp. 511–514.
24. Higgins, D. D., Bailey, J. E., "Fracture Measurements on Cement Paste," *Journal of Materials Science*, Vol. 11, 1976, pp. 1995–2003.
25. Hillemeier, B., Hilsdorf, H. K., "Fracture Mechanics Studies on Concrete Compounds," *Cement and Concrete Research*, Vol. 7, 1977, pp. 523–536.
26. Hillerborg, A., Modéer, M., and Petersson, P. E., "Analysis of Crack Formation and Crack Growth in Concrete by Means of Fracture Mechanics and Finite Elements," *Cement and Concrete Research*, Vol. 6, 1976, pp. 773–782.
27. Hillerborg, A., "A Model for Fracture Analysis," *Report TVBM-3005*, Lund Institute of Technology, Sweden, 1978.

28. Ingraffea, A. R., "Crack Propagation in Rock and Concrete Structures," *Proceedings of the International Symposium*, "Absorbed Specific Energy and/or Strain Energy Density Criterion," Ed. G. C. Sih, Budapest, Hungary, 1980.
29. Irwin, G. R., "Analysis of Stresses and Strains Near the End of a Crack Traversing a Plate," *Journal of Applied Mechanics*, Vol. 24, 1957, pp. 361–364.
30. Kaplan, M. F., "Crack Propagation and the Fracture of Concrete," *American Concrete Institute Journal*, Vol. 58, No. 11, Nov., 1961, pp. 591–610.
31. Khrapkov, A. A., Trapesnicov, L. P., and Geinats, G. S., "The Application of Fracture Mechanics to the Investigation of Cracking in Massive Concrete Construction Elements of Dams," *Proceedings of the 4th International Congress on Fracture*, Waterloo, Belgium, 1977.
32. Mindess, S., and Nadeau, J. S., "Effect of Notch Width of K_{IC} for Mortar and Concrete," *Cement and Concrete Research*, Vol. 6, 1976, pp. 529–534.
33. Moavenzadeh, F., Kuguel, R., "Fracture of Concrete," *Journal of Materials*, Vol. 4, No. 3, 1969, pp. 497–519.
34. Naus, D. J., Batson, G. B., Lott, J. L., "Fracture Mechanics of Concrete," *Fracture Mechanics of Ceramics*, Ed. Bradt, Hasselman, Lange, Vol. 2, 1974, pp. 469–481.
35. Naus, D. J., Lott, J. L., "Fracture Toughness of Portland Cement Concretes," *American Concrete Institute Journal*, June, 1969, pp. 481–489.
36. Petersson, P. E., "Fracture Energy of Concrete: Practical Performance and Experimental Results," *Cement and Concrete Research*, Vol. 10, 1980, pp. 91–101.
37. Petersson, P. E., and Gustavsson, P. J., "A Model for Calculation of Crack Growth in Concrete-Like Materials," *2nd International Conference on Numerical Methods in Fracture Mechanics*, Swansea, England, 1980.
38. Rice, J. R., "A Path Independent Integral and the Approximate Analysis of Strain Concentration by Notches and Cracks," *Journal of Applied Mechanics*, Vol. 35, 1968, pp. 379–386.
39. Rice, J. R., "Mathematical Analysis in the Mechanics of Fracture," *Fracture*, Ed. Liebowitz, Vol. III, 1968, pp. 191–311.
40. Romualdi, J. P., and Batson, G. B., "Mechanics of Crack Arrest in Concrete," *Journal of the Engineering Mechanics Division*, ASCE, June, 1963, pp. 147–167.
41. Schmidt, R. A., "Fracture-Toughness Testing of Limestone," *Experimental Mechanics*, May, 1976, pp. 161–167.
42. Schmidt, R. A., and Lutz, T. J., "K_{IC} and J_{IC} of Westerly Granite-Effects of Thickness and In-Plane Dimensions," *ASTM STP 678*, 1979, pp. 166–182.
43. Shah, S. P., "Whither Fracture Mechanics in Concrete Design?" *Engineering Foundation Conference on Cement Production and Use*, June, 1979.
44. Shah, S. P., and McGarry, F. J., "Griffith Fracture Criterion and Concrete," *Journal of the Engineering Mechanics Division*, ASCE, Dec., 1971, pp. 1663–1675.
45. Sih, G. C., "Phenomena of Instability: Fracture Mechanics and Flow Separation," *Naval Research Reviews*, Vol. 32, No. 3, Spring, 1980.
46. Sok, C., and Baron, J., "Mecanique de la Rupture Appliquee au Beton Hydraulique," *Cement and Concrete Research*, Vol. 9, 1979, pp. 641–648.
47. "Standard Method of Test for Plane Strain Fracture Toughness of Metallic Materials," *E 399-74, American Society on Testing and Materials*.
48. Strange, P. C., and Bryant, A. H., "Experimental Tests on Concrete Fracture," *Journal of the Engineering Mechanics Division*, ASCE, Vol. 105, No. EM2, Apr., 1979, pp. 337–342.
49. Swartz, S. E., Hu, K. K., and Jones, G. L., "Compliance Monitoring of Crack Growth in Concrete," *Journal of the Engineering Mechanics Division*, ASCE, Vol. 104, No. EM4, Aug., 1978, pp. 789–800.
50. Walsh, P. F., "Crack Initiation in Plain Concrete," *Magazine of Concrete Research*, Vol. 28, 1976, pp. 37–41.
51. Walsh, P. F., "Fracture of Plain Concrete," *Indian Concrete Journal*, Vol. 46, Nov., 1972, pp. 469–470, and 476.
52. Weisinger, R., Costin, L. S., and Lutz, T. J., "K_{IC} and J-Resistance-Curve Measurements on Nevada Tuff," *Experimental Mechanics*, Feb., 1980, pp. 68–72.
53. Welch, G. B., and Haisman, B., "The Application of Fracture Mechanics to Concrete and the Measurement of Fracture Toughness," *Materials and Structures (RILEM)*, Vol. 2, No. 9, 1969, pp. 171–177.

54. Zaitsev, J. W., and Wittmann, F. H., "Crack Propagation in a Two-Phase Material Such as Concrete," *Proceedings of the 4th International Conference on Fracture*, Waterloo, Belgium, 1977.
55. Ziegeldorf, S., Müller, H. S., and Hilsdorf, H. K., "A Model Law for the Notch Sensitivity of Brittle Materials," *Cement and Concrete Research*, Vol. 10, 1980, pp. 589–599.
56. Ziegeldorf, S., Müller, H. S., and Hilsdorf, H. K., "Effect of Aggregate Particle Size on Mechanical Properties of Concrete," *Proceedings of the 5th International Conference on Fracture*, Cannes, France, 1981.

Appendix II.—Notation

The following symbols are used in this paper:

b = structure size;
COD = crack opening displacement;
D = pipe diameter;
E = real Young's modulus;
E^* = fictitious Young's modulus;
$\mathscr{G}_{IC}$ = crack extension force;
J_{IC} = critical value of J-integral;
K_{IC} = fracture toughness;
$N = Dv/\mu$ = Reynolds number;
$s = K_{IC}/b^{1/2}\sigma_u$ = brittleness number;
v = fluid flow velocity;
σ_u = ultimate strength; and
μ = viscosity.