# Collinear stress effect on the crack branching phenomenon (1)

A. Carpinteri, A. Di Tommaso, E. Viola (2)

*The importance of the non-singular terms of the series representation for the stresses in the crack tip region has been underlined in recent papers.*

*In the present work it is recognized that the stress-intensity factors $K_I$ and $K_{II}$ are no longer sufficient to define fracture crisis for the plane problem. Some fracture criteria are applied introducing the third parameter $\lambda$, which is connected with the stress collinear to the crack's line. The respective fracture loci in the $K_I - K_{II} - \lambda$ space are discussed; they depend on the distance from the crack tip at which the crisis conditions are checked.*

*Finally an application of the above mentioned loci to the uniaxial loading condition is shown.*

## NOMENCLATURE OF THE SYMBOLS

| | |
|---|---|
| $K_I$, $K_{II}$, | stress-intensity factors; |
| $K_I^*$, $K_{II}^*$, | non-dimensional stress-intensity factors; |
| $\lambda$, | collinear stress parameter; |
| $a$, | half-length of the crack; |
| $r_0$, | characteristic distance from the crack tip at which the crisis conditions are verified; |
| $\sigma_r$, $\sigma_\vartheta$, $\tau_{r\vartheta}$, | stresses in the crack tip region; |
| $\sigma_\beta$, | stress normal to the crack's line at the infinity; |
| $\tau_\beta$, | stress tangential to the crack's line at the infinity; |
| $\sigma_P$, | stress collinear to the crack's line at the infinity; |
| $\sigma_1$, $\sigma_2$, | principal stresses at the infinity; |
| $s$, | ratio of the principal stresses; |
| $\beta$, | crack's inclination angle; |
| $\vartheta_0$, | crack branching angle; |
| $K_{IC}$, | critical value of the first stress-intensity factor; |
| $E$, | Young's modulus; |
| $\nu$, | Poisson ratio; |
| $\varepsilon_\vartheta$, | circumferential strain in the crack tip region. |

(1) Research sponsored by the C.N.R. (Consiglio Nazionale delle Ricerche, Italy).

(2) University of Bologna, Ist. Scienza delle Costruzioni, via le Risorgimento 2, Bologna, Italy.

## 1. INTRODUCTION

The *Fracture Mechanics* problems are generally studied on the basis of the stress and strain conditions at the tip of a crack present in a two-dimensional, homogeneous, isotropic and linear elastic body.

Up to now only the first term of the series representation for the elastic solution [1] has been considered.

The first term of the series representing the stress field is inversely proportional to the square root of the distance $r$ from the crack tip (singular term), while the second term is independent of such distance (non-singular term).

Therefore the closer the crack tip is, the more negligible the second term becomes in comparison with the first one: up to now for this reason the influence of the second term has so far been neglected.

Such an approximation, as pointed out in some recent papers by Eftis-Subramonian-Liebowitz ([2], [3]), is generally not correct, since the omission of the stress solution second term is equivalent to totally neglecting the effect of the stresses collinear to the crack's line.

Thus considering also the non-singular term, the fracture crisis depends on a further parameter $\lambda$, which is connected with the stress $\sigma_P$ collinear to the crack's line.

Therefore the stress-intensity factors $K_I$ and $K_{II}$, introduced by Irwin ([4], [5]), are no longer sufficient to define the crack's branching phenomenon.

As will be shown in the present paper, fracture loci are represented not by curves on the plane $K_I - K_{II}$, but by surfaces in the three-dimensional space $K_I - K_{II} - \lambda$.

In conformity with such an hypothesis the crisis surfaces vary according to the ratio $r_0/a$ between the distance $r_0$ from the crack tip, at which the crisis conditions are verified, and the half-length $a$ of the crack ([6], [7]).

Although the necessity to verify the crisis conditions considering the second term of the series representation for the stresses, has only recently been underlined (1977), the non-singular terms have already been calculated for some time. Cotterell [8] considered the first four terms of the series representation to study crack stability. Then the importance has already been recognized of connecting the experimental results with a suitable short distance from the crack tip, which is characteristic of the material, as connected with the size of the crack tip plastic zone.

Finnie and Saith [9] verified the crisis conditions at a short distance from the crack tip and corrected Williams and Ewing's curve [10], representing the branching angle $\vartheta_0$ against the crack's inclination angle $\beta$ with respect to the applied uniaxial stress direction.

## 2. THE FRACTURE CRISIS CRITERIA

Consider a plane slab of homogeneous, isotropic and linear elastic material with a through-thickness line-crack. Let such a body be loaded on the external boundary.

In these conditions the elastic stresses at the crack tip (*fig.* 1), i. e. for $0 < r_0/a \ll 1$, considering also the second term of the stress series representation ([2], [3], [6], [9]), are:

$$\sigma_r = \frac{1}{\sqrt{2\pi r}} \cos\frac{\vartheta}{2}\left[ K_I \left(1+\sin^2\frac{\vartheta}{2}\right) + \frac{3}{2} K_{II} \sin\vartheta - 2 K_{II} \operatorname{tg}\frac{\vartheta}{2}\right] - \sigma_\beta (1-\lambda)\cos^2\vartheta,$$

$$\sigma_\vartheta = \frac{1}{\sqrt{2\pi r}} \cos\frac{\vartheta}{2}\left[ K_I \cos^2\frac{\vartheta}{2} - \frac{3}{2} K_{II} \sin\vartheta\right] - \sigma_\beta (1-\lambda)\sin^2\vartheta, \tag{2.1}$$

$$\tau_{r\vartheta} = \frac{1}{\sqrt{2\pi r}} \cos\frac{\vartheta}{2}\left[K_I \sin\vartheta + K_{II}(3\cos\vartheta - 1)\right] + \sigma_\beta (1-\lambda)\sin\vartheta\cos\vartheta,$$

where $K_I = \sigma_\beta\sqrt{\pi a}$ and $K_{II} = \tau_\beta\sqrt{\pi a}$ are the stress-intensity factors relating to the first (opening) and to the second crack loading mode (sliding), and $\lambda = \sigma_p/\sigma_\beta$ is the parameter connected with the stress collinear to the crack's line. This parameter is positive if $\sigma_p$ and $\sigma_\beta$ are both tractions, it is negative if $\sigma_p$ is a compression.

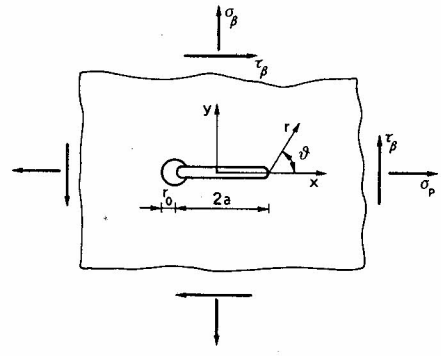


**Fig. 1. — Cracked plane slab loaded on the external boundary at an infinite distance from the line-crack.**

As is shown in figure 1, $\sigma_\beta$ is the stress normal to the crack's line at the infinity (it produces the opening effect), while $\tau_\beta$ is the stress tangential to the same line at the infinity (it produces the sliding effect).

When the crack's geometry and the loading conditions at the infinity are those of figure 2, we have:

$$\left.\begin{aligned} \sigma_\beta &= \frac{\sigma_1+\sigma_2}{2} - \frac{\sigma_2-\sigma_1}{2}\cos 2\beta, \\ \sigma_P &= \frac{\sigma_1+\sigma_2}{2} + \frac{\sigma_2-\sigma_1}{2}\cos 2\beta, \\ \tau_\beta &= \frac{\sigma_2-\sigma_1}{2}\sin 2\beta. \end{aligned}\right\} \tag{2.2}$$

If we define:

$$s = \frac{\sigma_1}{\sigma_2}, \qquad \lambda = \frac{\sigma_P}{\sigma_\beta}, \tag{2.3}$$

from (2.2) and (2.3) follows:

$$\lambda = \frac{(1+s)+(1-s)\cos 2\beta}{(1+s)-(1-s)\cos 2\beta}. \tag{2.4}$$

By (2.2) and (2.3) the stress-intensity factors expressions assume the following form [11]:

$$\left.\begin{aligned} K_I &= \sigma_\beta\sqrt{\pi a} = \frac{\sigma_2\sqrt{\pi a}}{2}\left[1+s-(1-s)\cos 2\beta\right], \\ K_{II} &= \tau_\beta\sqrt{\pi a} = \frac{\sigma_2\sqrt{\pi a}}{2}(1-s)\sin 2\beta. \end{aligned}\right\} \tag{2.5}$$

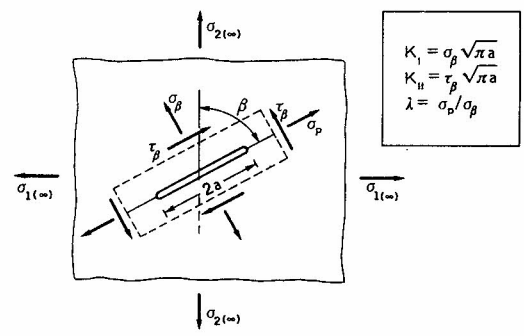


**Fig. 2. — Biaxial loading conditions around the line-crack.**

It can be noted from (2.5) that $K_I$ and $K_{II}$ depend on the crack's half-length $a$, on the crack's line inclination angle $\beta$ with respect to the principal stress $\sigma_2$ and on the ratio $s$ between the principal stresses acting at the infinity, but they are independent of the stress collinear to the crack's line, which is represented by the parameter $\lambda$, as (2.3) shows.

Moreover it has been observed [6] that the branching angle $\vartheta_0$ is a function of the following type:

$$\vartheta_0=\vartheta_0\left[K_I(s,\beta),\ K_{II}(s,\beta),\ \lambda(s,\beta),\ \frac{r_0}{a}\right], \tag{2.6}$$

where $r_0$ is the distance from the crack tip, at which the crisis conditions are verified. Then it is right to expect the material's fracture loci to depend also on the parameter $\lambda$, for each characteristic ratio $r_0/a$.

The crack branching angle $\vartheta_0$ against the crack's inclination angle $\beta$, with respect to the direction of the principal stress $\sigma_2$, is reported in figure 3, varying the characteristic ratio $r_0/a$ and for two different values of the ratio $s$ between the principal stresses.

The description of the experiments mentioned in figure 3 is reported in section 3.

### 2.1. The stress-criterion

The *maximum circumferential stress criterion* [12] requires that the crack branching angle $\vartheta_0$ at a very short distance from the crack tip satisfies the following fracture conditions ([11], [12]);

$$\left.\begin{aligned}&\left.\frac{\partial\sigma_\vartheta}{\partial\vartheta}\right|_{\vartheta=\vartheta_0;\ r=r_0}=0,\\&(\sigma_\vartheta)_{\vartheta=\vartheta_0;\ r=r_0}=\frac{K_{IC}}{\sqrt{2\pi r_0}}.\end{aligned}\right\} \tag{2.1.1}$$

The first equation is a stationary condition and enables us to obtain the branching angle's value $\vartheta_0$, while the second one is a crisis condition and contains the critical value $K_{IC}$ of the first stress-intensity factor.

In order to apply the crisis curves to each material, introduce the non-dimensional stress-intensity factors:

$$\left.\begin{aligned}K_I^*&=\frac{K_I}{K_{IC}}=\frac{\sigma_\beta\sqrt{\pi a}}{K_{IC}},\\K_{II}^*&=\frac{K_{II}}{K_{IC}}=\frac{\tau_\beta\sqrt{\pi a}}{K_{IC}}.\end{aligned}\right\} \tag{2.1.2}$$

Thus (2.1.1), by (2.1) and (2.1.2), assume the following form:

$$\sin\vartheta_0\left[\alpha_0\cos\frac{\vartheta_0}{2}+(1-\lambda)\cos\vartheta_0\right]K_I^*+\alpha_0(3\cos\vartheta_0-1)\cos\frac{\vartheta_0}{2}K_{II}^*=0, \tag{2.1.3}$$

$$\left[\cos^3\frac{\vartheta_0}{2}-\frac{3}{8}\frac{(1-\lambda)\sin^2\vartheta_0}{\alpha_0}\right]K_I^*-\frac{3}{2}\cos\frac{\vartheta_0}{2}\sin\vartheta_0\,K_{II}^*=1,$$

where:

$$\alpha_0=\frac{3}{8\sqrt{2}}\sqrt{\frac{a}{r_0}}>0. \tag{2.1.4}$$

Solving the equations system (2.1.3) it results:

$$\left.\begin{aligned}K_I^*&=\frac{\alpha_0(3\cos\vartheta_0-1)\cos\vartheta_0/2}{f(\vartheta_0)},\\K_{II}^*&=-\frac{\sin\vartheta_0\,[\alpha_0\cos\vartheta_0/2+(1-\lambda)\cos\vartheta_0]}{f(\vartheta_0)},\end{aligned}\right\} \tag{2.1.5}$$

with:

$$f(\vartheta_0)=\alpha_0\cos\frac{\vartheta_0}{2}(3\cos\vartheta_0-1)\times\left[\cos^3\frac{\vartheta_0}{2}-\frac{3(1-\lambda)\sin^2\vartheta_0}{8\alpha_0}\right]+\frac{3}{2}\cos\frac{\vartheta_0}{2}\sin^2\vartheta_0\times\left[\alpha_0\cos\frac{\vartheta_0}{2}+(1-\lambda)\cos\vartheta_0\right]. \tag{2.1.6}$$

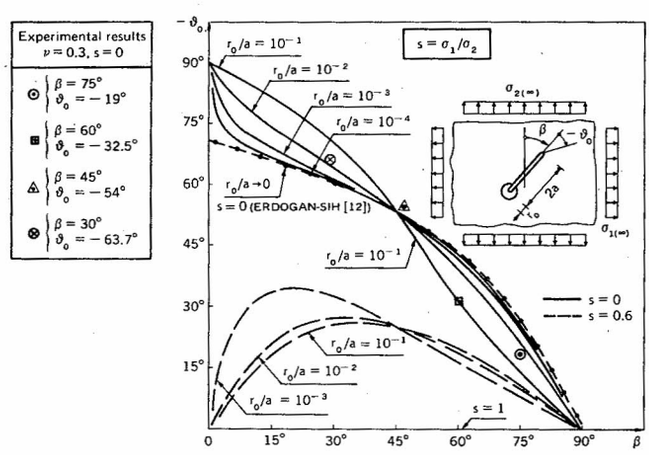


**Fig. 3. — Crack branching angle $\vartheta_0$ against the crack inclination angle $\beta$.**

Observe that for $\lambda=1$ the singular terms vanish in equations (2.1), and (2.1.5), (2.1.6) become the usual connections reported in some preceding papers by the Authors ([11], [13], [14], [15]).

For a determinate positive value of the parameter $\alpha_0$, (2.1.5) are the parametric equations (with parameter $\vartheta_0$) of a family of curves. Each curve of the family is defined by a value $\lambda$ and represents the fracture locus in the non-dimensional stress-intensity factors plane $K_I^*-K_{II}^*$.

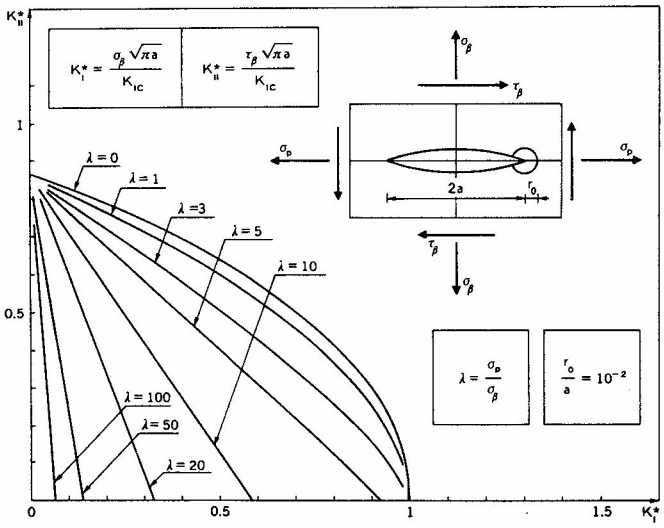


**Fig. 4. — Fracture loci in the non-dimensional stress-intensity factors plane for some values of the parameter $\lambda$, in the Stress-Criterion hypothesis, for the characteristic ratio $r_0/a = 0.01$.**

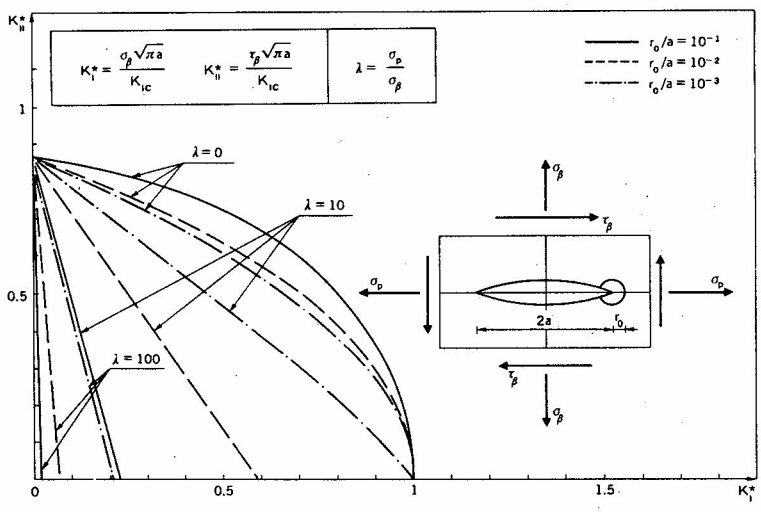


**Fig. 5. — Fracture loci in the non-dimensional stress-intensity factors plane for three values of the parameter $\lambda$, varying the characteristic ratio $r_0/a$, in the Stress-Criterion hypothesis.**

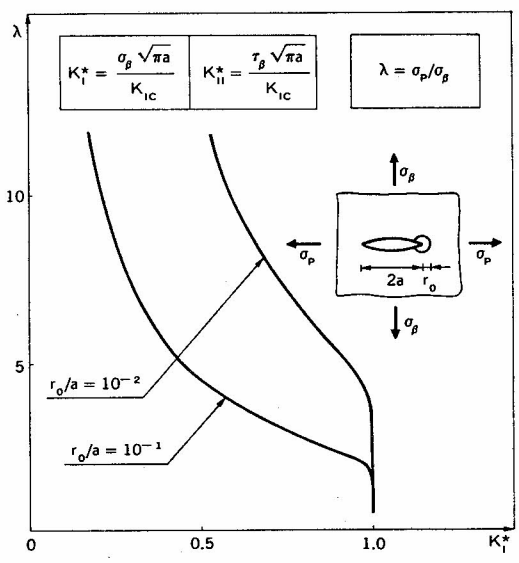


In other words, when a suitable value of the ratio $r_0/a$ is fixed, every fracture locus in the plane $K_I^* - K_{II}^*$ relates to an established ratio $\lambda$ between the stress $\sigma_P$, collinear to the crack's line, and the stress $\sigma_\beta$, orthogonal to the same line (*fig.* 1, 2).

In figure 4 the curve family is represented for the ratio $r_0/a = 0.01$.

This value has been chosen, since the characteristic ratio $r_0/a$, for which the best agreement occurs between the theoretical previsions and the experimental results [6], is taken in the interval $10^{-2} \leqq r_0/a \leqq 10^{-1}$.

Every curve of the family relating to a particular value $\lambda$ is symmetrical with respect to the axis $K_I^*$ and is valid only in the half-plane $K_I^* \geqq 0$.

**Fig. 6. — Collinear stress effect on fracture crisis (only opening).**

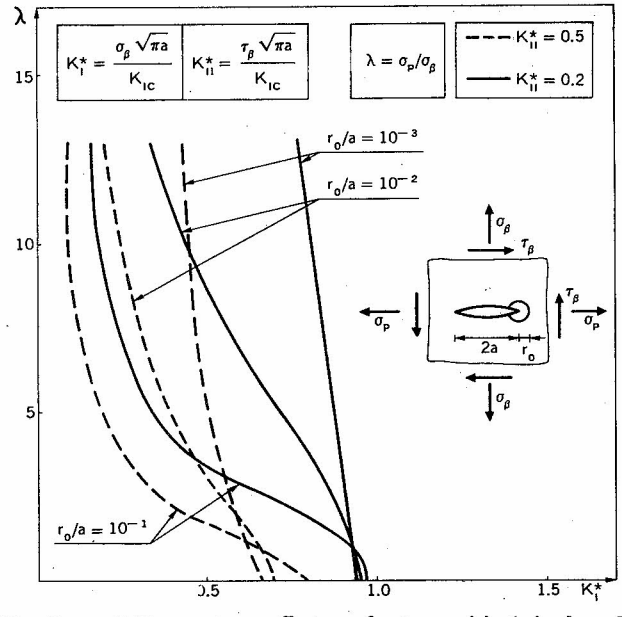


**Fig. 7. — Collinear stress effect on fracture crisis (mixed mode loading).**

In fact when the stress $\sigma_\beta$ is a compression (*fig.* 2), then the friction forces developing between the crack's edges have to be considered, as is reported in a similar way in [16] for the elliptic crack model, or in [13] for the line-crack model.

In figure 5 the influence of the ratio $r_0/a$ on fracture loci is shown, for three distinct values of the parameter $\lambda = \sigma_P/\sigma_\beta$.

The collinear stress effect on the crack branching phenomenon is shown also in figures 6 and 7.

In figure 6 it can be noted how, without sliding ($K_{II}^* = 0$), higher the parameter $\lambda$ is, lower the value $K_I^*$ is producing crack propagation.

Moreover the couple of critical values $\sigma_\beta - \sigma_P$ depends on the non-dimensional distance $r_0/a$ at which the crisis criterium is applied.

Finally the collinear stress effect on the fracture crisis is shown in figure 7 for two different values of the tangential stress $\tau_\beta$.

## 2.2. The strain-criterion

In order to include the Poisson ratio $\nu$ as well among the parameters defining the fracture crisis, a different crisis hypothesis is formulated.

Such hypothesis is called *Strain-Criterion*, since it defines as a possible branching angle $\vartheta_0$ that for which the circumferential strain $\varepsilon_\vartheta$ ($K_I$, $K_{II}$, $\lambda$, $\vartheta$) achieves the maximum value at a distance $r_0$ from the crack tip.

Identifying in this way the branching angle for a certain proportional loading, the crisis in this direction is predicted when the circumferential strain achieves the critical value $\varepsilon_{\vartheta_{CR}}$; it is characteristic of the material as connected with the critical value $K_{IC}$ of the first stress-intensity factor.

For plane stress conditions the circumferential strain $\varepsilon_\vartheta$ is connected with the radial stress component $\sigma_r$ and the circumferential one $\sigma_\vartheta$ as follows:

$$\varepsilon_\vartheta = \frac{\sigma_\vartheta - \nu \sigma_r}{E}. \tag{2.2.1}$$

Remembering the expressions (2.1), (2.2.1) appears in the following form:

$$\begin{aligned}\varepsilon_\vartheta = \frac{1}{E}\Bigg\{ & \frac{1}{\sqrt{2\pi r}} \cos\frac{\vartheta}{2}\Bigg[ K_I \cos^2\frac{\vartheta}{2}(1+\nu) \\ & -\frac{3}{2} K_{II} \sin\vartheta\,(1+\nu) + 2\,\nu\, K_{II}\, \mathrm{tg}\frac{\vartheta}{2} - 2\,\nu\, K_I \Bigg] \\ & + \frac{\lambda - 1}{\sqrt{\pi a}} (\sin^2\vartheta - \nu \cos^2\vartheta)\, K_I \Bigg\}.\end{aligned} \tag{2.2.2}$$

The maximum condition for the circumferential strain $\varepsilon_\vartheta$ gives the branching angle $\vartheta_0$ [6]:

$$\left.\begin{aligned} & \varepsilon_\vartheta\big|_{\vartheta=\vartheta_0} > 0; \qquad \left.\frac{\partial \varepsilon_\vartheta}{\partial \vartheta}\right|_{\vartheta=\vartheta_0} = 0; \\ & \left.\frac{\partial^2 \varepsilon_\vartheta}{\partial \vartheta^2}\right|_{\vartheta=\vartheta_0} < 0. \end{aligned}\right\} \tag{2.2.3}$$

In fact the stationary equation implicitly connects the angle $\vartheta_0$ with the three crack loading parameters $K_I$, $K_{II}$ and $\lambda$, for every ratio $r_0/a$ and Poisson ratio $\nu$.

When the only loading mode acting on the crack is the opening, (2.2.2) in the crack's direction assumes the following particular form:

$$\varepsilon_\vartheta\,(K_{II}=0,\ \lambda=0,\ \vartheta=0) = \frac{1}{E}\left\{ \frac{1}{\sqrt{2\pi r}} K_I\,(1-\nu) + \frac{\nu}{\sqrt{\pi a}} K_I \right\}. \tag{2.2.4}$$

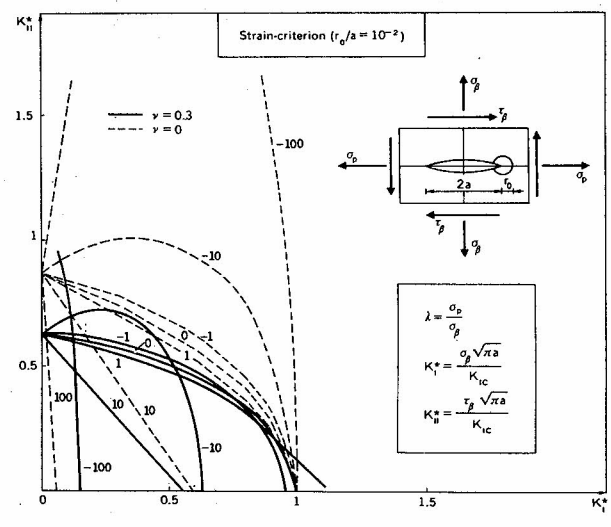


**Fig. 8. — Fracture loci in the non-dimensional stress-intensity factors plane for some values of the parameter $\lambda$, in the Strain-Criterion hypothesis, for the characteristic ratio $r_0/a = 0.01$.**

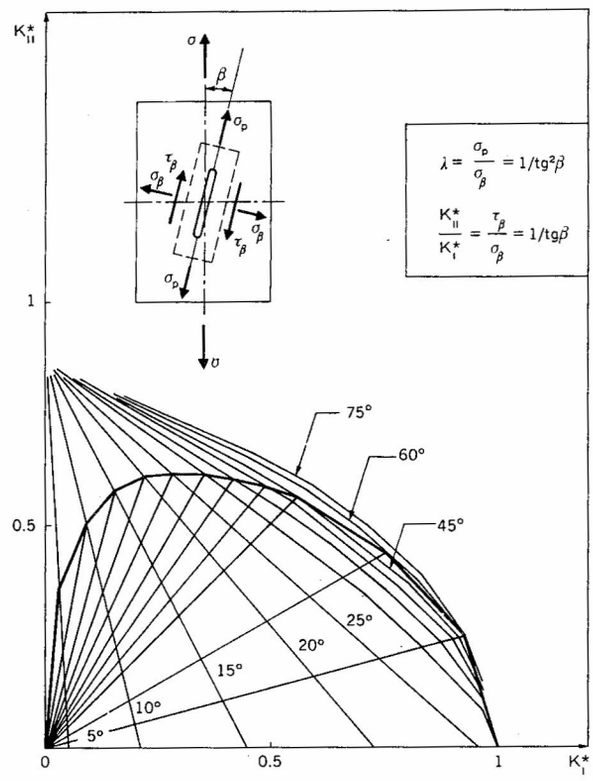


**Fig. 9. — Graphic construction of fracture locus for uniaxial loading conditions, according to the Stress-Criterion and for the characteristic ratio $r_0/a = 10^{-2}$.**

Then the critical value of the circumferential strain is that value which $\varepsilon_\vartheta$ ($K_{II}=0$, $\lambda=0$, $\vartheta=0$) offers when $K_I$ achieves its critical value $K_{IC}$:

$$\varepsilon_{\vartheta_{CR}} = \varepsilon_\vartheta\,(K_I=K_{IC},\ K_{II}=0,\ \lambda=0,\ \vartheta=0) = \frac{K_{IC}}{E}\left\{\frac{1-\nu}{\sqrt{2\pi r}} + \frac{\nu}{\sqrt{\pi a}}\right\}. \tag{2.2.5}$$

Therefore the crack branching condition is:

$$\varepsilon_\vartheta\,|_{\vartheta=\vartheta_0} = \varepsilon_{\vartheta_{CR}}. \tag{2.2.6}$$

Some fracture loci in the non-dimensional stress-intensity factors plane $K_I^* - K_{II}^*$ are reported in figure 8; they have been estimated by applying the Strain-Criterion at a non-dimensional distance from the crack tip $r_0/a = 10^{-2}$.

The continuous curves relate to a material with Poisson ratio $\nu=0.3$, while the dashed ones relate to a material with $\nu=0$. Naturally the latter are the same as the curves of the Stress-Criterion in the preceding section.

It is interesting to observe how by increasing $\nu$ the fracture loci decrease and predict a less stable crack behaviour.

A similar effect may be verified in Sih's Theory ([11], [17]). Crack's branching loci for constant, positive and negative values of the parameter $\lambda$ have been reported in figure 8.

In the Stress-Criterion hypothesis (*fig.* 8) the effect of a traction collinear to the crack's line works against the crack's stability, while the effect of a collinear compression works in favour of the crack's stability. In the Strain-Criterion hypothesis (with $\nu=0.3$) collinear tractions go against the crack's stability, while the effect of a collinear compression works in favour or against the crack's stability according to the ratio $K_{II}^*/K_I^*$ (*fig.* 8).

### 3. FRACTURE LOCUS FOR UNIAXIAL LOADING CONDITIONS

Consider an infinite plane slab, loaded at the infinity by an uniaxial traction $\sigma$, with a through-thickness crack of length $2a$ forming the angle $\beta$ with the force's direction (*fig.* 9).

The normal stresses at the infinity, respectively orthogonal and collinear to the crack (*fig.* 9), are provided by Mohr's usual connections:

$$\sigma_\beta = \sigma \sin^2\beta, \qquad \sigma_P = \sigma\cos^2\beta. \tag{3.1}$$

Then the tangential stresses at the infinity, orthogonal and collinear to the crack, may be expressed as follows:

$$\tau_\beta = \sigma \sin\beta\cos\beta. \tag{3.2}$$

Therefore it is evident how the non-dimensional parameters:

$$\lambda = \frac{\sigma_P}{\sigma_\beta} = \frac{1}{tg^2\beta}, \qquad \frac{K_{II}^*}{K_I^*} = \frac{\tau_\beta}{\sigma_\beta} = \frac{1}{tg\,\beta}, \tag{3.3}$$

are only functions of the crack's inclination angle $\beta$ with respect to the traction at the infinity. For every angle $\bar\beta$ one and only one branching crisis point is in the non-dimensional stress-intensity factors plane $K_I^* - K_{II}^*$.

Such a point can be identified as intersection of the crisis curve: $\lambda = \text{Const.} = 1/tg^2\bar\beta$, with the straight line crossing the origin and forming the angle $\bar\beta$ with the positive semi-axis $K_{II}^*$.

The graphic construction of the fracture locus for uniaxial loading conditions has been reported in figure 9, in the Stress-Criterion hypothesis and for the characteristic ratio $r_0/a = 10^{-2}$.

It is important to note how, considering the second term of the series representation, the fracture locus for uniaxial loading conditions also includes the origin of the axes $K_I^*$ and $K_{II}^*$. In fact for stresses collinear to the crack's line, that is for $\beta$ tending to zero, both the stress-intensity factors vanish, being:

$$K_I = \sigma_\beta\sqrt{\pi a}, \qquad K_{II} = \tau_\beta\sqrt{\pi a}, \tag{3.4}$$

while the parameter $\lambda$ tends to the infinity. When a crack is considered of a length $2a$, small with respect to the material's toughness, the fracture locus for uniaxial conditions is not completely contained in Mohr's circle of strength crisis [14].

TABLE I

| | $\beta = 90°$ | | $\beta = 75°$ | | $\beta = 60°$ | | $\beta = 45°$ | |
|---|---|---|---|---|---|---|---|---|
| P (kg) | 344 | A | 352 | B | 380 | C | 474 | D |
| $\sigma$ (kg mm$^{-2}$) | 2,29 | | 2,35 | | 2,54 | | 3,16 | |
| v (kg/min') | 68 | | 68,2 | | 52,6 | | 90 | |
| $-\vartheta_0$ (°) | 0,87 | | 19 | | 32,5 | | 54 | |

| | $\beta = 30°$ | | $\beta = 15°$ | | $\beta = 5°$ | | $\beta = 0°$ | |
|---|---|---|---|---|---|---|---|---|
| P (kg) | 446 | E | 597 | F | 732 | G | 903 | H |
| $\sigma$ (kg mm$^{-2}$) | 2,98 | | 3,98 | | 4,88 | | 6 | |
| v (kg/min') | 68 | | 70 | | 72 | | 98 | |
| $-\vartheta_0$ (°) | (63,7) | | – | | – | | – | |

In fact for angles $\beta$ lower than a certain limit-angle $\beta_0$ ($a$), the material's strength crisis occurs prior to the crack's branching crisis.

Some fracture loci for uniaxial loading conditions are reported for comparison in figure 10, in the Stress-Criterion hypothesis and for different values of the ratio $r_0/a$.

As can be verified, all the considered experimental results (notched slabs of PMMA) [14], except one, are in the area between the two curves $r_0/a=10^{-1}$ and $r_0/a=10^{-2}$ (they are closer to the curve relating to the ratio $r_0/a=10^{-1}$).

*Polymethylmethacrylato* (PMMA) has been chosen as experimental material, since its fracture occurs in a quasi-brittle manner, that is with small strain, low plastic dissipation energy and high propagation velocity.

Uniaxial tests have been carried out on PMMA-slabs of length 40 cm, width 5 cm and thickness 3 mm.

A central notch of length 1 cm and inclination angle $\beta$, with respect to the stress direction, equal to 0, 5, 15, 30, 45, 60, 75, 90°, has been carried out in each slab by a cutter of diameter 1.5 mm. Then the specimens have been gripped to the traction machine and loaded in a quasi-static manner up to failure.

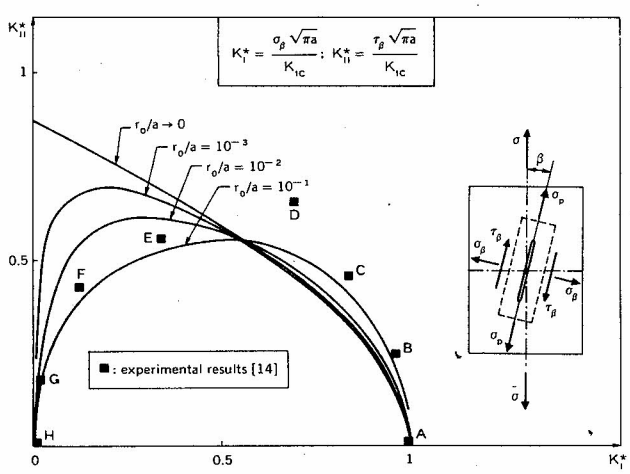


**Fig. 10. — Fracture loci for uniaxial loading conditions, according to the Stress-Criterion and for some values of the ratio $r_0/a$.**

The force $P$ (kg), producing the crack's branching, the respective stress $\sigma$ (kg.mm$^{-2}$) on the whole section, the loading velocity $V$ (kg/min') and the branching angle $\vartheta_0$, are reported in table I [14] for each inclination angle $\beta$ of the notch (see also *fig.* 3). Each value has been previously averaged by the experimental results of 4 identical specimens.

The couples of values $K_I - K_{II}$ producing crack branching are reported in table II [14], together with the respective non-dimensional stress-intensity factors $K_I^* - K_{II}^*$.

TABLE II

| $\beta$ | 90° | 75° | 60° | 45° | 30° | 15° | 5° | 0° |
|---|---|---|---|---|---|---|---|---|
| $K_I$ (kg mm$^{-3/2}$) | 9,30 | 8,90 | 7,77 | 6,49 | 3,07 | 1,08 | 0,15 | 0 |
| $K_{II}$ (kg mm$^{-3/2}$) | 0 | 2,34 | 4,39 | 6,35 | 5,22 | 3,98 | 1,68 | 0 |
| $K_I^*$ | 1 | 0,96 | 0,83 | 0,69 | 0,33 | 0,12 | 0,016 | 0 |
| $K_{II}^*$ | 0 | 0,25 | 0,47 | 0,68 | 0,56 | 0,43 | 0,18 | 0 |

## REFERENCES


[1] WILLIAMS M. L. — J. Appl. Mech., Vol. 24, 1957, pp. 109-114.

[2] EFTIS J., SUBRAMONIAN N., LIEBOWITZ H. — Eng. Fract. Mech., Vol. 9, 1977, pp. 189-210.

[3] EFTIS J., SUBRAMONIAN N., LIEBOWITZ H. — Eng. Fract. Mech., Vol. 9, 1977, pp. 753-764.

[4] IRWIN G. R. — J. Appl. Mech., Vol. 24, 1957, pp. 361-364.

[5] IRWIN G. R. *Handbuch der Physik,* Vol. VI, Springer, Berlin, 1958.

[6] VIOLA E. — Giornale del Genio Civile, Fasc. 1-3, 1979, pp. 39-50.

[7] EWING P. D., SWEDLOW J. L., WILLIAMS J. G. — Int. J. Fract., Vol. 12, 1976, pp. 85-93.

[8] COTTERELL B. J. — Fract. Mech., Vol. 2, 1966, pp. 526-533.

[9] FINNIE I., SAITH A. — Int. J. Fract., Vol. 9, 1973, pp. 484-486.

[10] WILLIAMS J. G., EWING P. D. — Int. J. Fract., Vol. 8, 1972, pp. 441-446.

[11] DI TOMMASO A., NOBILE L., VIOLA E., AIMETA. — Cagliari, 1976.

[12] ERDOGAN F., SIH G. C. — J. Basic. Eng., Vol. 85 D, 1963, pp. 519-525.

[13] CARPINTERI A., DI TOMMASO A., VIOLA E. — Giornale del Genio Civile, Fasc. 4-6, 1978, pp. 201-224.

[14] CARPINTERI A. — Giornale del Genio Civile, Fasc. 1-3, 1978, pp. 67-82.

[15] NOBILE L., VIOLA E. — Giornale del Genio Civile, Fasc. 10-12, 1977, pp. 369-382.

[16] MCCLINTOCK F. A., WALSH J. B. — Proc. 4th U. S. National Cong. of Applied Mech., 1962, pp. 1015-1021.

[17] SIH G. C. — Eng. Fract. Mech., Vol. 5, 1973, pp. 365-377.

**RÉSUMÉ**

**Effet de contrainte colinéaire sur le phénomène de propagation des fissures.** — *Le problème de la mécanique de la rupture a été étudié jusqu'ici en considérant, dans la solution élastique, valable autour des extrémités de fissure, le seul premier terme du développement en autofonctions de Williams. Ce terme de la série qui représente le champ de contrainte est inversement proportionnel à la racine carrée de la distance radiale de l'extrémité de l'axe de fissuration.*

*Cependant, dans cette étude, on considère aussi le deuxième terme de cette série, indépendant de la distance radiale. L'omission du deuxième terme, comme on le souligne dans des travaux assez récents, équivaut à négliger l'effet des tensions normales colinéaires à l'axe de fissuration.*

*Si l'on considère aussi le terme non singulier, on admet que la rupture dépend d'un paramètre ultérieur lié à la contrainte normale colinéaire à l'axe de fissuration. Par conséquent, les facteurs d'intensité de contrainte $K_I$ et $K_{II}$, introduits par Irwin, ne suffisent plus à décrire la ramification de la fissure. Les endroits de rupture, comme on le montre dans cette étude, sont représentés par des surfaces dans l'espace tridimensionnel $K_I - K_{II} - \lambda$, et non plus par des courbes dans le plan $K_I - K_{II}$.*

*Conformément à ces hypothèses, les surfaces varient en fonction de la distance radiale de l'extrémité de la fissure d'après laquelle on estime les conditions de crise (déterminant la rupture). Cette distance est caractéristique du matériau considéré, puisqu'elle est liée à la dimension de la zone plastique à l'extrémité de la fissure.*

*Dans la partie finale de l'étude, on montre ensuite une application dans un cas de sollicitation sous charge monoaxiale en indiquant les résultats expérimentaux obtenus sur des plaques de plexiglass entaillées.*